BFF-3SD

BFF 3SDD-29N308-T01-LC5-000S04
BFF 3SDD-29N498-T01-LC5-000S04
BFF 3SDD-04X388-T01-LC5-000S04
BFF 3SDD-29N308-T01-UE5-000S04
BFF 3SDD-29N498-T01-UE5-000S04
BFF 3SDD-04X388-T01-UE5-000S04



english

Contents

1 About this guide **1**
1.1 Validity . . . 1
1.2 Disclaimer . . . 1
1.3 Explanation of the warnings . . . 1
1.4 Symbols and conventions . . . 2
1.5 Technical terms and abbreviations used . . . 2

2 Safety notes **4**
2.1 Intended use . . . 4
2.2 Reasonably foreseeable misuse . . . 4
2.3 General safety notes . . . 4
2.4 Use of accessories and spare parts . . . 5

3 Scope of delivery, transport and storage **6**
3.1 Scope of delivery . . . 6
3.2 Unpacking . . . 6
3.3 Transport . . . 6
3.4 Storage conditions . . . 6

4 Product Information **7**
4.1 Product description . . . 7
4.2 Technical data . . . 11
4.3 Accessories . . . 17

5 Interfaces and communication **18**
5.1 Display elements . . . 18
5.2 Error indications and signals . . . 19

6 Installation and connection **22**
6.1 Installation . . . 22
6.2 Electrical connection . . . 25
6.3 Shielding and cable routing . . . 26

7 Commissioning **27**
7.1 Before you begin . . . 27
7.2 Post-commissioning measures . . . 27

8 Operation and maintenance **28**
8.1 Startup . . . 28
8.2 Operation Modes . . . 28
8.3 Overview of parameters . . . 28
8.4 Menu tree . . . 30
8.5 Adjustment . . . 32
8.6 Switching functions . . . 32
8.7 Dampening function . . . 34
8.8 Operating notes . . . 34
8.9 Cleaning . . . 35
8.10 Maintenance . . . 35

9 Decomissioning **36**
9.1 Dismounting . . . 36
9.2 Return . . . 36
9.3 Disposal . . . 37

1 About this guide

1.1 Validity

This guide provides all the information required for the safe use of the BFF 3SD. It applies to the following models:

BFF 3SD…

This guide was created in English. Other language versions are translations of this guide.

© Copyright 2026, Balluff GmbH Zabergäustraße 8, 73765 Neuhausen auf den Fildern

All contents are protected by copyright. All rights reserved, including the rights of reproduction, distribution, processing and translation.

1.2 Disclaimer

The following description is provided free of charge and is a general application example. The description should support the programming and planning of PLC applications and illustrate possible solutions. The user has no claim to warranty, error correction or updates. In particular, any claims for compensation that could result from the use of this description are excluded. This liability limitation excludes

- (a) damages due to loss of life, personal injury or harm to health,
- (b) liability in accordance with the Product Liability Act and -
- (c) cases of intent.

Prior to implementation in systems and machines, please check whether the description provided here is intended for your application. The use of this free description shall be deemed to imply acceptance of the warranty and liability limitation!

1.3 Explanation of the warnings

Always observe the warnings in this guide and the measures described to avoid hazards.
The warnings used here contain various signal words and are structured as follows:

SIGNAL WORD

Type and source of the hazard
Consequences if not complied with
► Measures to avoid hazards

The individual signal words mean:

NOTICE

Identifies a danger that could **damage or destroy the product**.

⚠ CAUTION

The general warning symbol together with the signal word CAUTION indicates a hazard which can lead to **slight or moderate injuries**.

WARNING

The general warning symbol together with the signal word WARNING indicates a hazard which can lead to **death or serious injuries**.

DANGER

The general warning symbol in conjunction with the signal word DANGER identifies a hazard which, if not avoided, will certainly result in **death or serious injury**.

1.4 Symbols and conventions

- Individual instructions are indicated by a preceding triangle.

Action sequences are numbered consecutively:

1. Instruction 1
2. Instruction 2

Numbers unless otherwise indicated are decimals (e.g. 23). Hexadecimal numbers are represented with a preceding 0x (e.g. 0x12AB).

Buttons or selectable menu entries are described in italic and small caps, e.g.Save.

Menu commands are joined with a greater-than sign, e.g. “Settings>Options” stands for the menu command Options from the Settings menu.

Note

Note, tip
This symbol indicates general notes.

1.5 Technical terms and abbreviations used

ADT
Fieldbus Autodetection

BET
Balluff Engineering Tool

DID
Device ID

EIP
EtherNet/IP

I/O
Input/Output

IOL
IO-Link

ISDU
IO-Link Parameter (Index Service Data Unit)

MBT
Modbus

PLC
Programmable Logic Controller

PNT
Profinet

SIO
Standard IO Mode

VID
Vendor ID

2 Safety notes

2.1 Intended use

The flow switch has been designed and built solely for the intended use described here, and may only be used accordingly.

- Conversion of flow velocities into an electric signal.
- No assembly in downpipes open towards the bottom.
- Use in buildings and outdoors (avoid high ambient temperatures and direct UV irradiation).
- Environment with max. pollution degree of 3.
- Voltage supply of overvoltage category II.

The flow switch is used to monitor whether the flow exceeds or drops below specified flow values, e.g. to prevent pumps from dry running. The analog signal should only be used as a trend indicator in order to monitor process changes, such as filter blocking.

Only use the flow switch in applications that lie within its technical performance limits. For performance limits see chapter *Technical data*.

Refrain from unauthorised modifications to the flow switch. Any use beyond or different to the intended use is considered as improper use.

2.2 Reasonably foreseeable misuse

The product is not intended for the following applications and areas and may not be used there:

- in safety-oriented applications in which personal safety or the safety of machinery and equipment depends on the device function
- in explosive atmospheres
- in areas with food contact
- for processing personal data in accordance with the GDPR
- for processing financial transactions
- in unauthorised modifications to the pressure switch
- for use in hazardous areas
- for use with abrasive or unstable fluids, in particular hydrogen

2.3 General safety notes

Activities such as **installation**, **connection** and **startup** may only be carried out by qualified personnel.

Qualified personnel are persons whose technical training, cyber security training, knowledge and experience as well as knowledge of the relevant regulations allows them to assess the work assigned to them, recognize possible hazards and take appropriate safety measures.

The **operator** is responsible for ensuring compliance with local safety regulations, maintaining a safe and cyber-secure operating environment, and taking appropriate measures to ensure that a defect in the product will not result in hazards to persons or equipment. This includes assessing cybersecurity risks and implementing the necessary cybersecurity measures for the operation of the machine.

The product must not be opened, modified or changed. If defects and unresolvable faults occur in the product, take it out of service and secure against unauthorized use.

Inadequate isolation of the product may result in damage and malfunction of the product or in the application due to unauthorized access or modification of data and settings or product availability.

⚠ WARNING

Before mounting and commissioning the instrument, ensure you read the operating instructions.

2.4 Use of accessories and spare parts

It is recommended to use original accessories and original spare parts from Balluff. Using accessories and spare parts from third parties can lead to damage to the instrument or accidents, due to quality defects or other reasons.

Balluff assumes no liability for damage or accidents caused by a malfunction or unsuitability of accessories and spare parts which do not originate from Balluff (e.g. non-compliance with the IP ingress protection of connectors). No warranty claims can be made which arise due to a malfunction or unsuitability of any accessory or spare part from a third party.

3 Scope of delivery, transport and storage

3.1 Scope of delivery

- Flow switch
- Basic information

Cross-check scope of delivery with delivery note.

3.2 Unpacking

To ensure that the delivered product is an original product of Balluff GmbH, check the following points when unpacking: The information on the nameplate of the device must match the information on the delivery note. In case of any doubts of the integrity or authenticity of the product, please contact Balluff sevice.

3.3 Transport

Note

With improper transport, damage to property can occur.
- When unloading packed goods upon delivery as well as during internal transport, proceed carefully and observe the symbols on the packaging.
- With internal transport, observe the instructions in chapter storage-conditions

Check the flow switch for any damage that may have been caused by transport. Obvious damage must be reported immediately.

3.4 Storage conditions

Do not remove packaging until just before mounting. Keep the packaging as it will provide optimum protection during transport (e.g. change in installation site, sending for repair).

- Store the device in a physically secured location with controlled access.
- Store product in original packaging.
- Observe ambient conditions.

Permissible conditions at the place of storage:

- Storage temperature: -20 … +80 °C [-4 … +176 °F]

Avoid exposure to the following factors:

- Direct sunlight or proximity to hot objects
- Mechanical vibration, mechanical shock (putting it down hard)
- Soot, vapour, dust and corrosive gases
- Humid or wet environment
- Hazardous environments, flammable atmospheres

4 Product Information

This section provides information about the product features and specifications.

4.1 Product description

4.1.1 Function

A flow sensor is used to measure the flow of liquids in machines and industrial systems. The sensor operates according to the calorimetric measuring principle and converts the flow velocity of the medium into an electrical signal. The measured value is processed electronically and, depending on the device version, provided via the corresponding interface as either an analog or a digital output signal. In the factory setting, the flow value is shown in m/s on the digital display. The following units are available:

- %
- m/s
- l/min
- m³/h
- ft/s
- ft³/min
- gal(US)/min
- gal(I)/min

Additionally, the instrument measures the medium temperature in °C or °F. The instrument features the following output signals, depending on the configuration:

- Two switching outputs
- One switching output and one analog output
- Two switching outputs and one analog output



1 Digital display
2 Electrical connection
3 Spanner flats
4 Process connection
5 Probe

Fig. 1: Operating and display elements

Electrical connection: The electrical connection is made via a plug connection (see *Type code*).

Housing: Robust housing containing the sensor electronics and pressure sensing components.

Display: The display shows the current process value and is used for parameterization and device configuration.

Process connection: The sensor is mounted to the application via a standardized process connection. Various process connection types are available depending on the application requirements (see *Type code*).

4.1.2 Construction

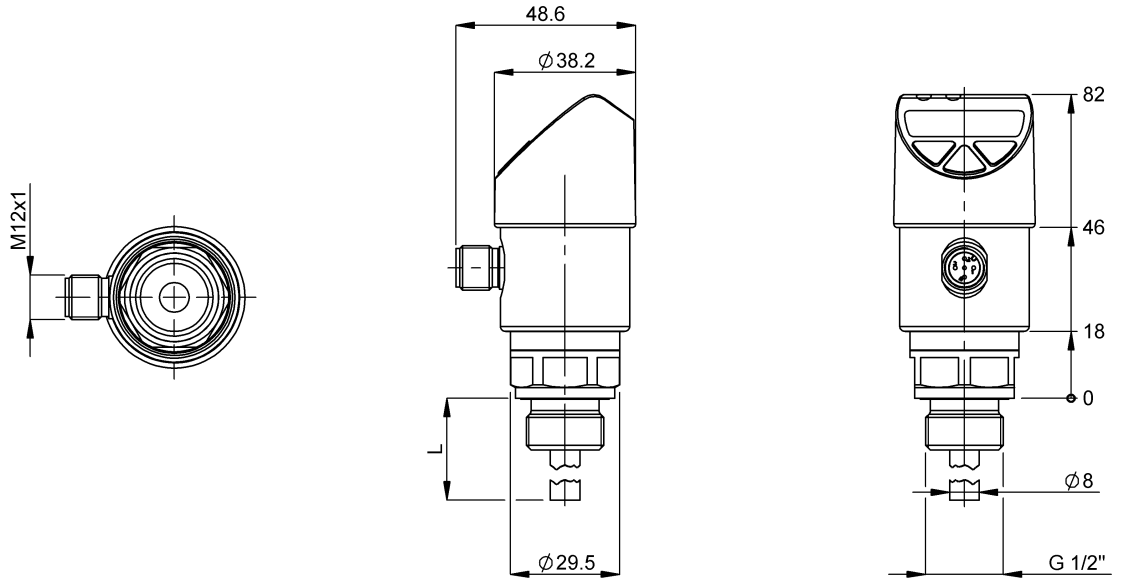

Fig. 2: BFF 3SDD-29Nxx8-... with Male Thread G 1/2”

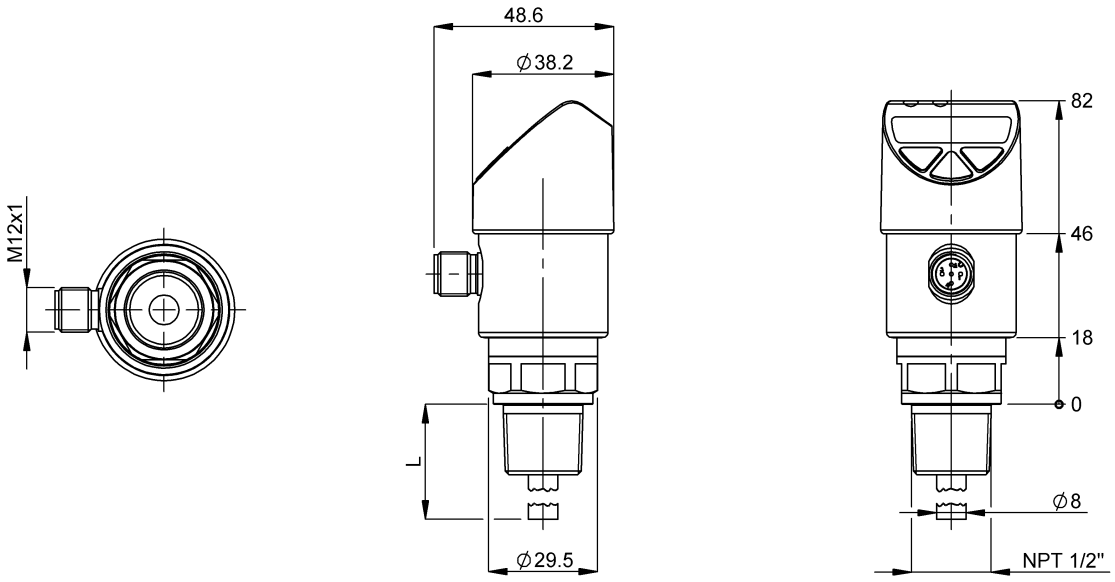

Fig. 3: BFF 3SDD-04X388-... with Male Thread NPT 1/2”

4.1.3 Labeling

If the serial number becomes illegible (e.g. due to mechanical damage or overpainting), traceability will no longer be possible.



1 Order code
2 Type code
3 Serial number
4 QR-Code
5 Operating voltage and Measuring range
6 Approvals

Fig. 4: Part label (excerpt, example)

4.1.4 Type code

Example	BFF	3SDD	-	29N308	-	T01	-	LC5	-	000S04
Definition	BFF	3S***ab***	-	***ccdeef***	-	T***gg***	-	***hij***	-	000S04

Table 1: Type code variant details

Code	Parameter	Meaning
BFF 3S	Sensor type	Balluff Fluid Sensor Flow
a	Design	D = Display device with three buttons
b	Pressure resistance	D = 40 bar
cc	Process connection	04 = Male thread 1/4” NPT 29 = Male thread G1/2”
d	Process connection sealing material	N = NBR X = No sealing ring
ee	Sensor length	30 = 30 mm 38 = 38 mm 49 = 49 mm
f	Probe diameter	8 = 8 mm
T*gg*	Measurement range	01 = 0…300 cm/s water like media

continues on next page

Table 1 – continued from previous page

Code	Parameter	Meaning
h	Interface	L = IO-Link with analog output U = IO-Link
i	Interface version and output	C = IO-Link V1.1, COM2, one PNP/NPN switching output and analog output, 4…20 mA or 0…10 V E = IO-Link V1.1, COM2, two PNP switching outputs
j	Operating voltage	5 = 15…35 V DC
000S04	Electrical connection	M12 connector, 4-pin

4.2 Technical data

Depending on the selected instrument version (e.g. seals), the specification may deviate from the specifications listed here. The specifications in the order documentation are definitive.

4.2.1 Accuracy specifications

The accuracy of the flow switch depends on various parameters such as flow profile, inlet conditions, viscosity and/or thermal conductivity of the medium, possible contamination and/or deposits on the sensor. Therefore, the reference measured values given only constitute an accuracy under calibration conditions.

The model BFF-3SD offers extensive adjustment possibilities to adapt the instrument to the on-site conditions in the best possible way.As a flow switch it is used for reliable monitoring, for example, of dry running. The flow value output should only be used as a trend indicator in order to monitor process changes.

Table 2: Accuracy specifications

Flow	0.05 … ≤ 1 m/s ≤ ±5 % of end value of measuring range > 1 … ≤ 1.75 m/s ≤ ±10 % of end value of measuring range > 1.75 … 3 m/s ≤ ±20 % of end value of measuring range
Temperature	≤ ±2 K
Non-repeatability per IEC 62828-1	
Flow	±2 % of end value of measuring range
Temperature	≤ 0.5 K (for flow ≥ 0.2 m/s)
Temperature error, flow at -20 … +85 °C [-4 … +185 °F]	0.13 % of end value of measuring range per K (typical)
Switch hysteresis	
Flow	Adjustable, min. 1.7 % of end value of measuring range
Temperature	Min. 1.8 K
Reference conditions	Per IEC 62828-1
Calibration conditions	
Medium	Water
Nominal position	Process connection downwards Inner diameter of pipe 26 mm Upstream/Downstream pipe 1 m/0.5 m Marking towards the upstream flow side twist of ±5°

4.2.2 Measuring range

The in-factory adjustment is carried out with the medium water. It is recommended to carry out the adjustment, relative to the minimum/maximum flow of the system, via the menu.

Table 3: Measuring range

Flow	0 … 3 m/s
Temperature	-20 … +85 °C [-4 … +185 °F]
Turndown ratio (flow or temperature)	The analog output signal is freely scalable within the range of 5:1. When setting turndown, there is a proportional increase in the measuring deviation and temperature error.

4.2.3 Digital display

Table 4: Digital display

Indication range	14 segments
Units	Flow: %, m/s, l/min, m³/h, ft/s, ft³/min, gal(US)/min, gal(I)/min Factory setting: m/s Temperature °C, °F Factory setting: °C
Colour	Red LED
Character size	9 mm [0.35 in]
Digits	4-digit
Display	Display can be rotated electronically through 180°

4.2.4 Output signal

Table 5: Output signal

Output signal	Switch output 1	Switch output 2	Analog output	IO-Link option
Output variant 1	x	x	-	x
Output variant 2	x	-	x	x

4.2.5 Further details on: Output signal

Table 6: Further details on: Output signal

Signal type	
Switching output 1	Flow, PNP Flow, NPN Factory setting: Flow, PNP
Switching output 2	Flow, PNP Flow, NPN Temperature, PNP Temperature, NPN Factory setting: Flow, PNP

continues on next page

Table 6 – continued from previous page

Analog output	Flow, 4 … 20 mA Flow, 0 … 10 V Temperature, 4 … 20 mA Temperature, 0 … 10 V Factory setting: Flow, 4 … 20 mA
Switching function	Hysteresis Window Factory setting: Hysteresis
Contact function	Normally open Normally closed Factory setting: Normally open
Setting range of the switch points	
Flow	0.05 … 3 m/s [0.16 … 9.84 ft/s] Factory setting: 3 m/s
Temperature	-18.2 … +85 °C [-0.8 … +185 °F] Factory setting: 85 °C
Load in Ω	
Analog signal 4 … 20 mA	≤ 500 Ω
Analog signal DC 0 … 10 V	> max. output voltage/1 mA
Signal clamping	I min = 3.8 mA I max = 20.5 mA U min = 0 V U max = 10.3 V
Switching current[1]	Max. 250 mA per switching output
Switching voltage	Supply voltage - 1 V
Communication	
Communication protocol	IO-Link 1.1
Voltage supply	
Supply voltage	DC 15 … 35 V
Current supply	Max. 650 mA including switching current
Dynamic properties per IEC 62828-1	
Settling time	

continues on next page

Table 6 – continued from previous page

Flow	6 s (0 … 100 %, 100 … 0 %)
Temperature	4 s (t90) 2 s (t63)
Warm-up time	10 s

4.2.6 Electrical connection

Table 7: Electrical connection

Connection type	Circular connector M12 x 1 (4-pin)
Ingress protection per IEC 60529[2]	IP65 and IP67
Short-circuit resistance	S+ / SP1 / SP2 vs. U-
Reverse polarity protection	U+ vs. U-
Insulation voltage	DC 500 V
Overvoltage protection	DC 40 V

4.2.7 Material

Table 8: Material

Material (wetted)	
Process connection, probe	Stainless steel 316Ti
Sealing	→ See table under *Sealing*
Material (in contact with the environment)	
Case	Stainless steel 304
Keyboard	TPE-E
Display window	PC
Display head	PC+ABS blend

1 For max. switching currents see *Derating curves*.
2 The stated ingress protection (per IEC 60529) only applies when plugged in using mating connectors that have the appropriate ingress protection.

4.2.8 Operating conditions

Table 9: Operating conditions

Medium temperature range[3]	-20 … +85 °C [-4 … +185 °F]
Ambient temperature range[3]	-20 … +70 °C [-4 … +158 °F]
Storage temperature range	-20 … +80 °C [-4 … +176 °F]
Max. operating pressure	40 bar [580 psi] 30 bar [435 psi] With process connection M18 x 1.5 20 bar [290 psi] With optional compression fitting
Vibration resistance per IEC 60068-2-6	6 g (under resonance) 3 g, 10 … 500 Hz (with compression fitting)
Shock resistance per IEC 60068-2-27	50 g, mechanical
Service life	100 million switching cycles

4.2.9 Derating curves

Max. ambient temperature, if ambient temperature ≥ medium temperature

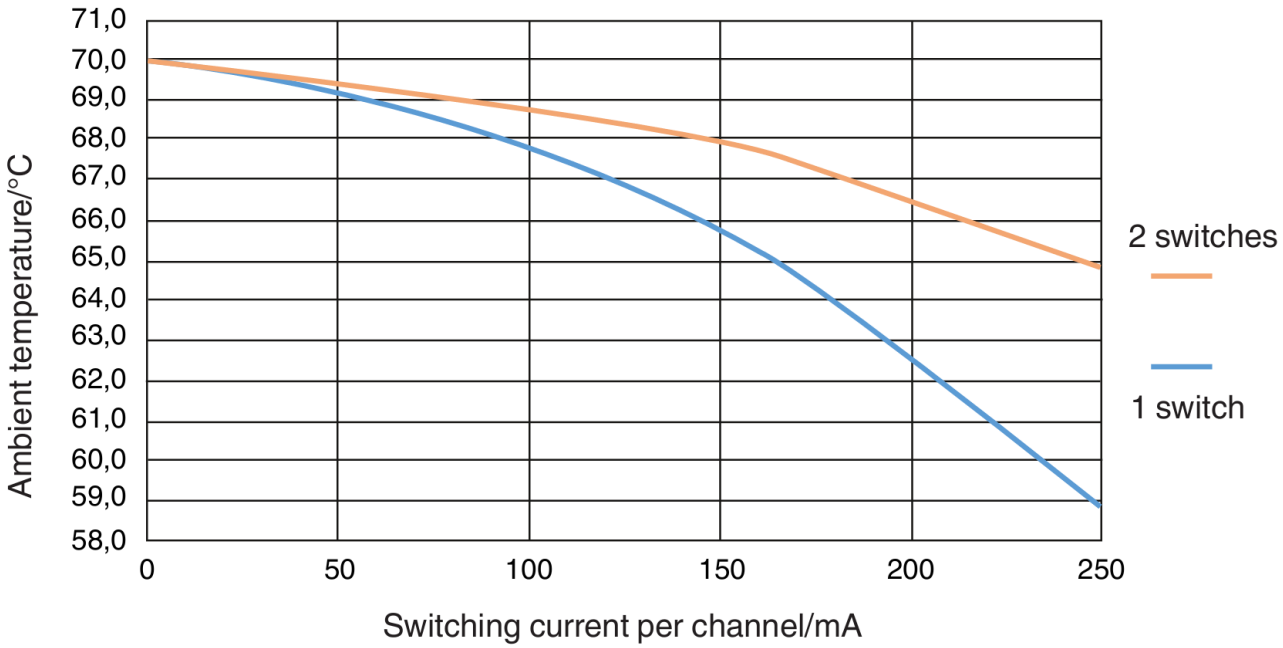

Max. Ambient temperature, if medium temperature = 85 °C [185 °F]

3 For permissible medium and ambient temperature see *Derating curves*.

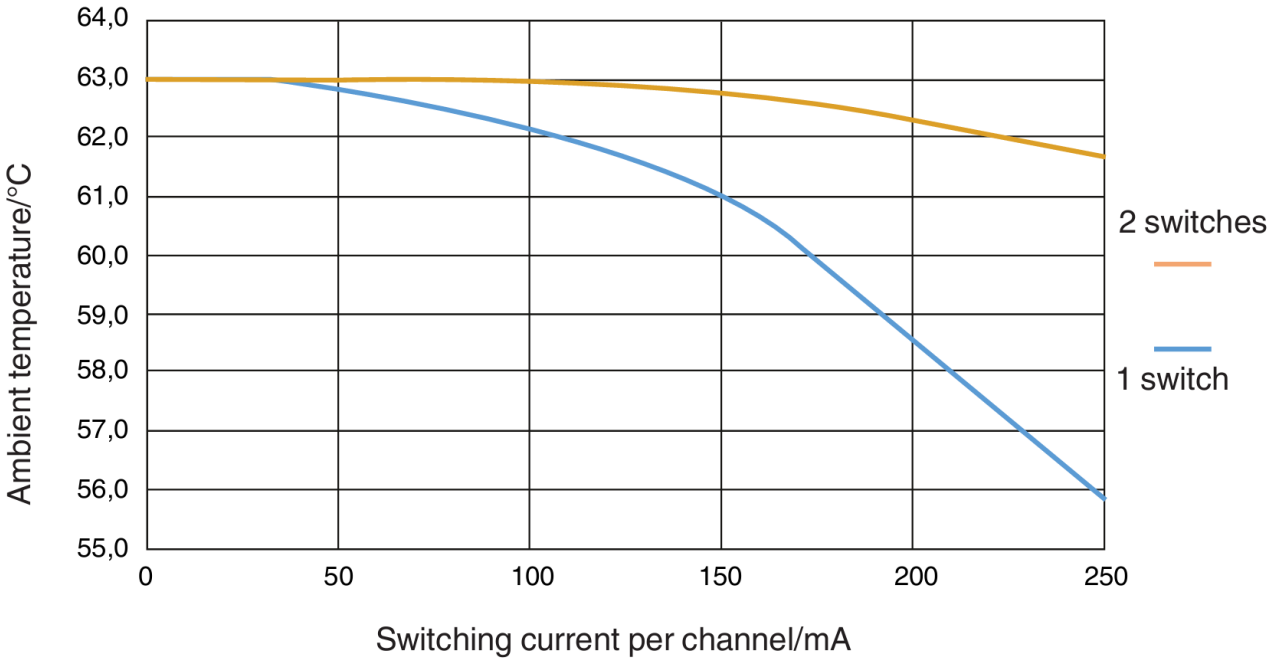

4.3 Accessories

Accessories are not included in the scope of delivery and must be ordered separately.

Note

Recommended accessories can be found at www.balluff.com on the product page.

5 Interfaces and communication

This section provides information about the interfaces and communication.

5.1 Display elements

The figure below shows the display elements, status indicators, and operating functions of the device.



1	Status LED
2	4-digit LED display
3	INFO Button
4	CONFIRMATION button
5	MENU Button

Fig. 1: Display element

5.1.1 Status LED

- Status of switching output 1
- Status of switching output 2

5.1.2 4-digit LED display

- Display of flow
- Display of menu item
- Display of parameter

5.1.3 INFO Button

Display mode

- Short press: Display of unit

- Long presse: Display of the parameters

Programming mode

- Short press: Menu up, Parameter value up (step-wise)
- Long press: Menu up, Parameter value up (fast)

5.1.4 CONFIRMATION button

Display mode

- Short press: Display of unit

Programming mode

- Short press: Selection of menu item, Confirmation of input

5.1.5 MENU Button

Display mode

- Short press: Display of unit
- Long presse: Jumping into the programming mode

Programming mode

- Short press: Menu down, Parameter value up (step-wise)
- Long press: Menu down, Parameter value up (fast)

5.2 Error indications and signals

⚠ CAUTION

Physical injuries and damage to property and the environment
If faults cannot be eliminated by means of the measures listed, the flow switch must be removed from the voltage supply immediately.
- ► Ensure that pressure or signal is no longer present and protect against accidental commissioning. If measuring range scaling is set, despite an analog value of 4 mA or 0 V, pressure can still be present.
- ► Contact the manufacturer.
- ► If a return is needed, please follow the instructions given in chapter *Return*.

⚠ WARNING

Physical injuries and damage to property and the environment caused by hazardous media
Upon contact with hazardous media (e.g. oxygen, acetylene,flammable or toxic substances), harmful media (e.g. corrosive, toxic, carcinogenic, radioactive), and also with refrigeration plants and compres sors, there is a danger of physical injuries and damage to property and the environment.
- ► Should a failure occur, media with extremely high temperature and under high pressure or vacuum may be present at the instrument.
- ► For these media, in addition to all standard regulations, the appropriate existing codes or regulations must also be followed.
- ► Wear the requisite protective equipment.

i Note

Additional information can be found at www.balluff.com on the product page.

5.2.1 Faults

In the event of any faults, first check whether the flow switch is mounted correctly, mechanically and electrically. If complaint is unjustified, the handling costs will be charged.

Table 1: Faults and corrective measures

Fault	Possible cause	Measure
No output signal	Cable break	Check the continuity
No output signal	No / wrong supply voltage	Rectify the supply voltage
No output signal/cable break	Mechanical load too high	Replace probe with a suitable design
No / wrong output signal	Wiring error	Observe the pin assignment
Wrong output signal	Process temperature out of measuring range; sensor drift caused by overtemperature	Check temperature range
Wrong output signal	Sensor break/short-circuit	Send the instrument to the manufacturer
Wrong output signal	Sensor drift caused by chemical attack	Check media compatibility
Wrong output signal and too long response time	Wrong mounting geometry, for example mounting depth too small and heat dissipation too high	Move the temperature-sensitive area of the sensor into the medium
Wrong output signal and too long response time	Deposits on the sensor element	Remove deposit
Signal span too small	Supply voltage too high/low	Rectify the power supply
Signal span drops	Moisture has entered	Fit the cable correctly

5.2.2 Warning and errors

Via the digital display, the instrument's internal errors are displayed. The following table shows the error codes and their meaning.

Table 2: Warnings

Warning	Description
ATT1	On changing the switch point, the reset point of the instrument is automatically reduced
ATT2	Trim function cannot be executed because a parameter is outside the permissible limits • For flow unit %: Smallest span for teach function not maintained • For flow units other than %: Offset or correction factor is outside the permissible limit
ATT3	Password entered for menu access is incorrect.
ATT4	The entire measuring range cannot be displayed. DiOL ("display overload") is shown outside the display range
ATT5	Maximum turndown exceeded.
ILOC	Menu locked over IO-Link.
SC	Short circuit of output 1 or/and output 2
PAS	Prompt for password input.
OL	Overload, measuring range exceeded > approx. 25 % (display blinks)

Table 3: Errors

Error	Description
ERR	General error • Reset to factory setting • Restart the instrument
ERR1	Ambient conditions outside the specification • Supply voltage too low • Internal temperature at display too high
ERR2	Sensor error

Acknowledgement of an error display by pressing the "Enter" key.

6 Installation and connection

6.1 Installation

6.1.1 Mechanical mounting

Only use the flow switch if it is in perfect condition with respect to safety. Prior to commissioning, the pressure switch must be subjected to a visual inspection.

Commissioning and operation of the instrument may only be carried out by skilled personnel, see chapter *Safety notes*

Requirements for mounting point

The mounting position and probe length are extremely important for the quality and reliability of the measuring results.

The mounting point must meet the following conditions:

- Sealing faces are clean and undamaged.
- Sufficient space for a safe electrical installation.
- Permissible ambient and medium temperatures remain within the performance limits. Consider possible restrictions on the ambient temperature range caused by mating connector used. For performance limits, see chapter *Technical data*
- The probe tip must be completely surrounded by medium.
- If possible, position the probe tip in the area of maximum flow velocity (pipe centre).
- The minimum immersion depth of the sensor is L ≥16 mm.
- The probe tip must not touch the opposite wall.

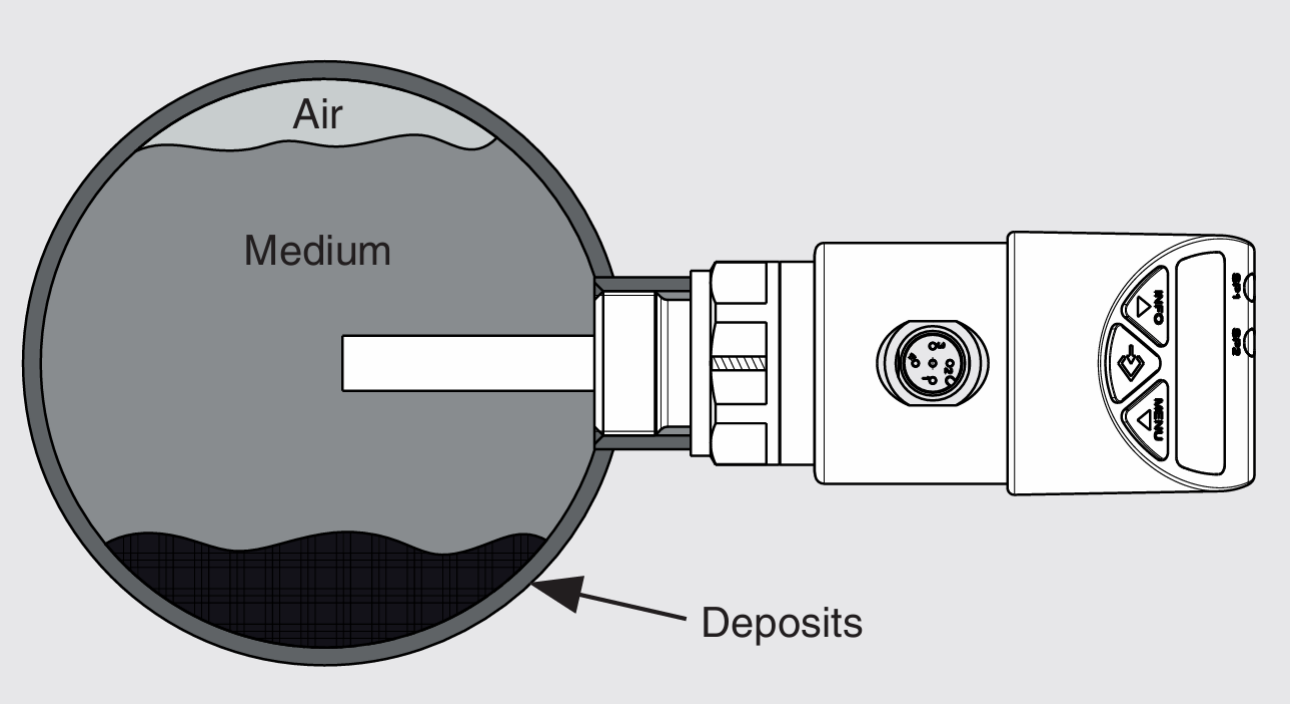

Recommended mounting positions

Horizontal pipes

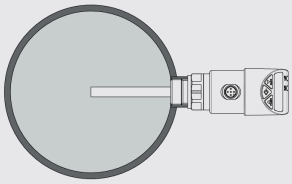

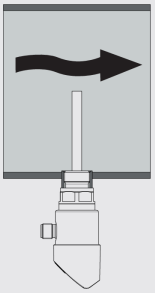

Only if the pipeline is free from deposits.

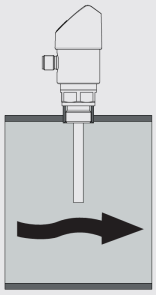

Only if the pipeline is completely filled with medium.

Risers and vertical pipes

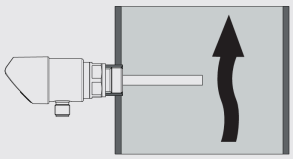

Mounting the flow switch in downpipes open towards the bottom is impermissible. This use does not comply with the intended use.

Sensor alignment

During mechanical assembly of the BFF-3SD, make sure that the installation mark points in the opposite direction of the flow direction of the medium.

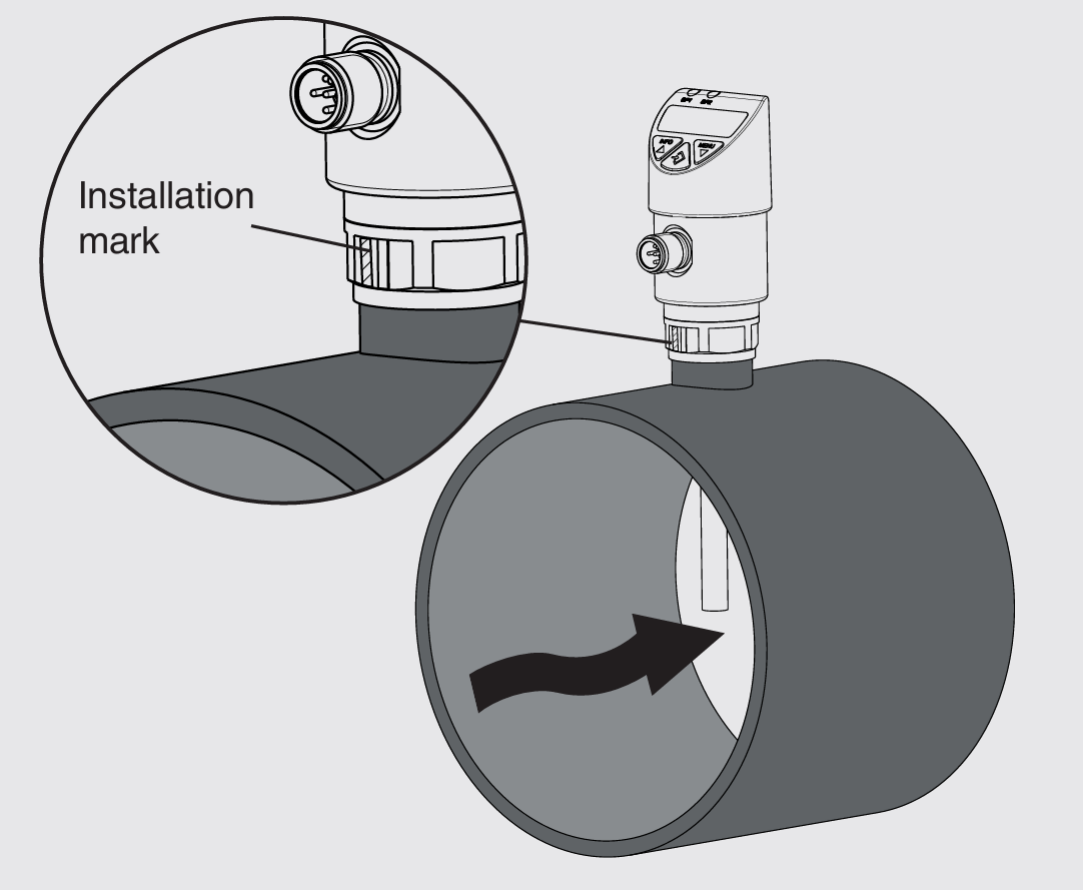

Sealing

For sealing the process connections with parallel threads, use flat gaskets, lens-type sealing rings or profile sealings at the sealing face. With a tapered thread (e.g. NPT thread), sealing is made in the thread using additional sealing materials, e.g. PTFE tape (EN 837-2).

Disturbing interferences in the piping system

For correct measurement, the flow switch requires a fully developed flow profile. This is why calming sections must be provided in the pipeline after a pump, a pipe elbow, installed parts and changes in cross-section.

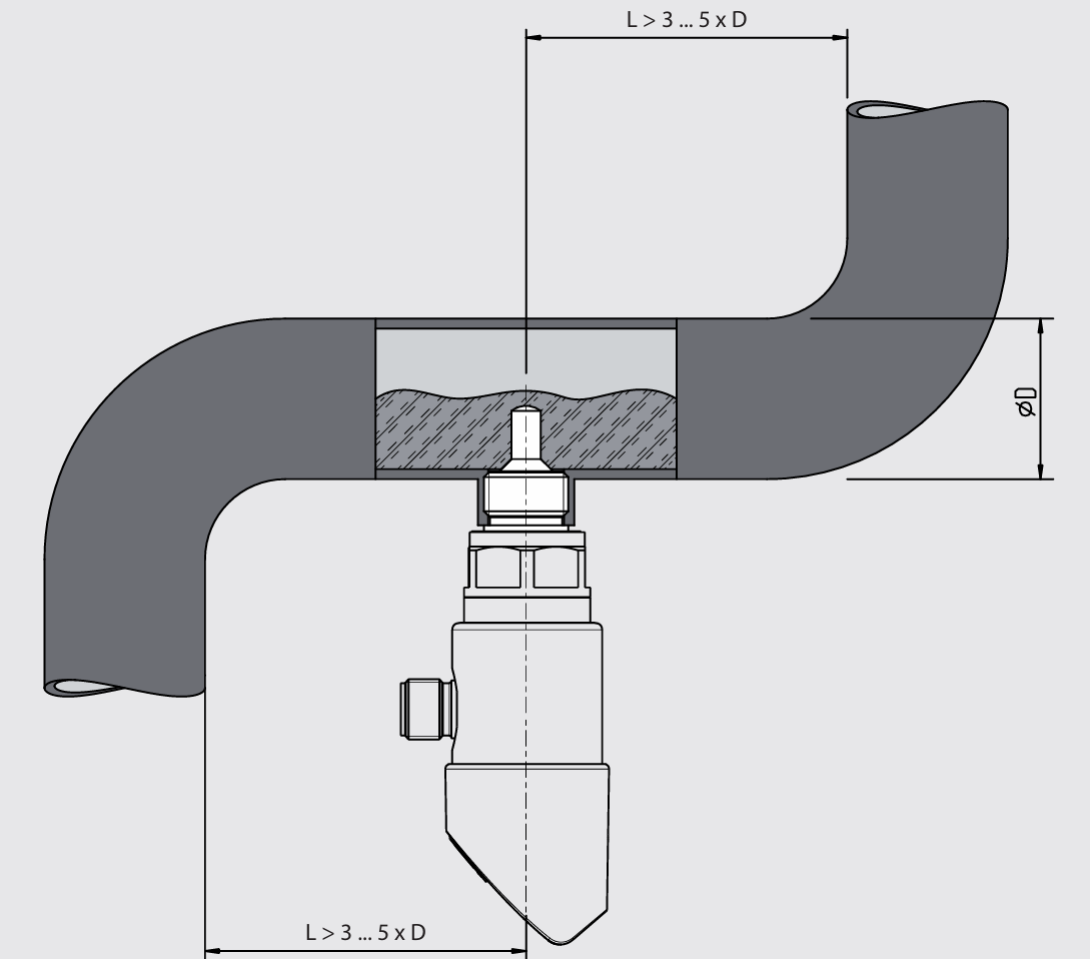

Mounting the device

Note

The max. torque depends on the mounting point (e.g. material and shape). If you have any questions, please contact our application consultant.

6.2 Electrical connection

Requirements for voltage supply

Supply voltage: DC 15 ... 35 V

This equipment is intended for operation with low voltages which are separated from the AC 230 V (50 Hz) mains voltage or voltages greater than AC 50 V or DC 120 V for dry environments. A connection to an SELV circuit is recommended, or alternatively to circuits with a different protective measure in accordance with IEC 60364-4-41 installation standard.

The power supply for the flow switch must be made via an energy-limited electric circuit in accordance with section 9.4 of UL/EN/IEC 61010-1 or an LPS to UL/EN/IEC 60950-1 or class 2 in accordance with UL1310/UL1585 (NEC or CEC). The voltage supply must be suitable for operation above 2,000 m above sea level, should the flow switch be used at this altitude.

Requirement for shielding and grounding

The flow switch must be grounded in accordance with the grounding concept of the plant. The instrument must be grounded via the process connection.

Connecting the instrument

1. Assemble the mating connector.
2. Establish the plug connection.

Pin assignment

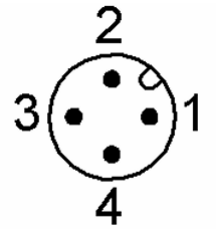

Fig. 1: M12-4 Pin plug pin assignment (view on pin side)

Table 1: M12 plug pin assignment

Pin	Signal	Description
1	U+	Positive power supply
2	SP2/S+	Switching output 2/Analog output
3	U-	Negative power supply
4	SP1/C	Switching outout 1/Communication with IO-Link

Note

For pin assignments, see also product label

For instruments without North American certification

This equipment is intended for operation with low voltages which are separated from the AC 230 V (50 Hz) mains voltage or voltages greater than AC 50 V or DC 120 V for dry environments. A connection to an SELV circuit is recommended, or alternatively to circuits with a different protective measure in accordance with IEC 60364-4-41 installation standard.

For instruments with North American certification per UL/CSA IEC 61010-1

The power supply for the pressure sensor must be made via an energy-limited electric circuit in accordance with section 9.3 of UL/EN/IEC 61010-1 or an LPS per UL/EN/IEC 62368-1 or class 2 in accordance with UL1310/UL1585 (NEC or CEC). The voltage supply must be suitable for operation above 2,000 m should the pressure switch be used at this altitude.

6.3 Shielding and cable routing

Include the pressure switch in the equipotential bonding via the process connection or connect it to ground (earth).

7 Commissioning

Only use original parts and accessories.

7.1 Before you begin

To operate the device in a cybersecure environment, take the following measures before commissioning:

- Change default user and add a strong password. Secure the password in a safe location.
- Check if the device is running the latest firmware version. If not, update the firmware to the latest version that fits your needs.
- Set the brute force protection configuration to values that fit your needs.
- Replace the default self-signed certificate with a root certificate that is trusted by your organization. Secure the private key in a safe location.

7.2 Post-commissioning measures

In order to maintain a secure environment, take the following measures after commissioning:

- Create a backup of the device configuration and store it in a secure location.

8 Operation and maintenance

8.1 Startup

DANGER

Uncontrolled system movement When starting up, if the sensor is part of a closed loop system whose parameters have not yet been set, the system may perform uncontrolled movements. This could result in personal injury and equipment damage.
Please mind the following safety instructions:

- Persons must keep away from the system's hazardous zones.
- Startup must be performed only by trained technical personnel.
- Observe the safety instructions of the equipment or system manufacturer.

To start up the system, proceed as follows:

1. Check connections for tightness and correct polarity.
2. Replace damaged connections.
3. Turn on the system.
4. Check measured values and adjustable parameters

8.2 Operation Modes

Table 1: Operation modes

Mode	Description
System start	Digital display is fully activated for 3 s. When the flow switch is powered up within the range of the hysteresis, the output switch is set to "not active" by default.
Programming mode (setting the parameters)	**Activating the programming mode** Keep the "MENU" button pressed for approx. 2 s. If the password is set to≠ 0000, a password will be requested. If authentication is successful, then it enters the programming mode, otherwise it reverts to display mode. **Timeout** If, during the setting of a parameter, no button is pressed for 60 s, the instrument returns to the display mode with the value unchanged.
Display mode (normal operation, display of pressure value)	**Returning to display mode** Simultaneous pressing of "INFO" and "MENU".

8.3 Overview of parameters

Table 2: Overview of parameters

Menu item	Description	Parameter	Factory setting
INI	Initialisation menu		

continues on next page

Table 2 – continued from previous page

Menu item	Description	Parameter	Factory setting
UNIF	Flow unit	m/s, l/min, m³/h, ft/s, ft³/s, US gal/min, Imp. gal/min, %	m/s
TIF	Min/max flow setting, only active when UNIF = %	MIN (NO/YES) sets the current flow value to 0 %; MAX (NO/YES) sets the current flow value to 100 %	
0SET	Zero point setting / execution of "Autozero", only active when UNIF ≠ %	YES / NO; YES sets the current flow value to zero	
mu_F	Flow multiplier, only active when UNIF ≠ %	0.10 … 10.00	1.00
uniT	Temperature unit	°C, °F	°C
PIPD	Pipeline diameter in mm, only active when UNIF ≠ %	10 … 1,000	25
SP1 / SP2	Hysteresis function: Switch point (switching output 1, if applicable 2)	0.05 … 3 m/s [0.17 … 9.84 ft/s]; 1.7 … 100 %; if SP2 is configured for temperature: -18.2 … +85 °C [-0.8 … +185 °F]	3.000 m/s
FH1 / FH2	Window function: Window high (switching output 1, if applicable 2)		
RP1 / RP2	Hysteresis function: Reset point (switching output 1, if applicable 2)	0 … 2.950 m/s [0 … 9.67 ft/s]; 0 … 98.3 %; if SP2 is configured for temperature: -20 … +78.2 °C [-4 … +172.8 °F]	2.700 m/s
FL1 / FL2	Window function: Window low (switching output 1, if applicable 2)		
EF	Extended programming functions		
RES	Reset the parameters to factory setting	YES / NO	
DS1 / DS2	Switching delay time, which must occur without interruption before any electrical signal change occurs (SP1, if applicable SP2)	0.00 … 65.00 s	0.00 s
DR1 / DR2	Reset delay time, which must occur without interruption before any electrical signal change occurs (RP1, if applicable RP2)	0.00 … 65.00 s	0.00 s
OU1 / OU2	Switching function (switching output 1, if applicable 2)	HNO = hysteresis function, normally open HNC = hysteresis function, normally closed FNO = window function, normally open FNC = window function, normally closed	HNO
OU3	Setting of analog output signal	I = 4 … 20 mA; U = DC 0 … 10 V	I
POL1 / POL2	Switching logic (switching output 1, if applicable 2)	PNP, NPN	PNP

continues on next page

Table 2 – continued from previous page

Menu item	Description	Parameter	Factory setting
SEL2 / SEL3	Selection for measuring signal of output 2 and, if applicable, output 3	FLOW / TEMP	FLOW
ALOW	Measuring range scaling / turn-down (analog value, start value)	Corresponding to analog output	Start of measuring range
AHGH	Measuring range scaling / turn-down (analog value, end value)	Corresponding to analog output	End of measuring range
AVGD	Dampening (digital display)	0.00 … 65.00 s	0.20 s
DISM	Display value in display mode	ACT = current flow value; HIGH / LOW = MAX / MIN flow; ACTT = current temperature; OFF = display off	ACT
DISR	Rotate the indication by 180° (digital display)	YES / NO	No
RHL	Clear memory (min/max flow)	YES / NO	
PAS	Password entry	0000 = no password; password input digit by digit	0000
TAG	Measuring instrument name (TAG)	32 selectable characters (A–Z, 0–9, -, SPACE). Two consecutive spaces terminate the input and delete this and the subsequent characters.	Without

8.4 Menu tree

Certain menu items (light grey) are only displayed if the pressure switch features the respective option

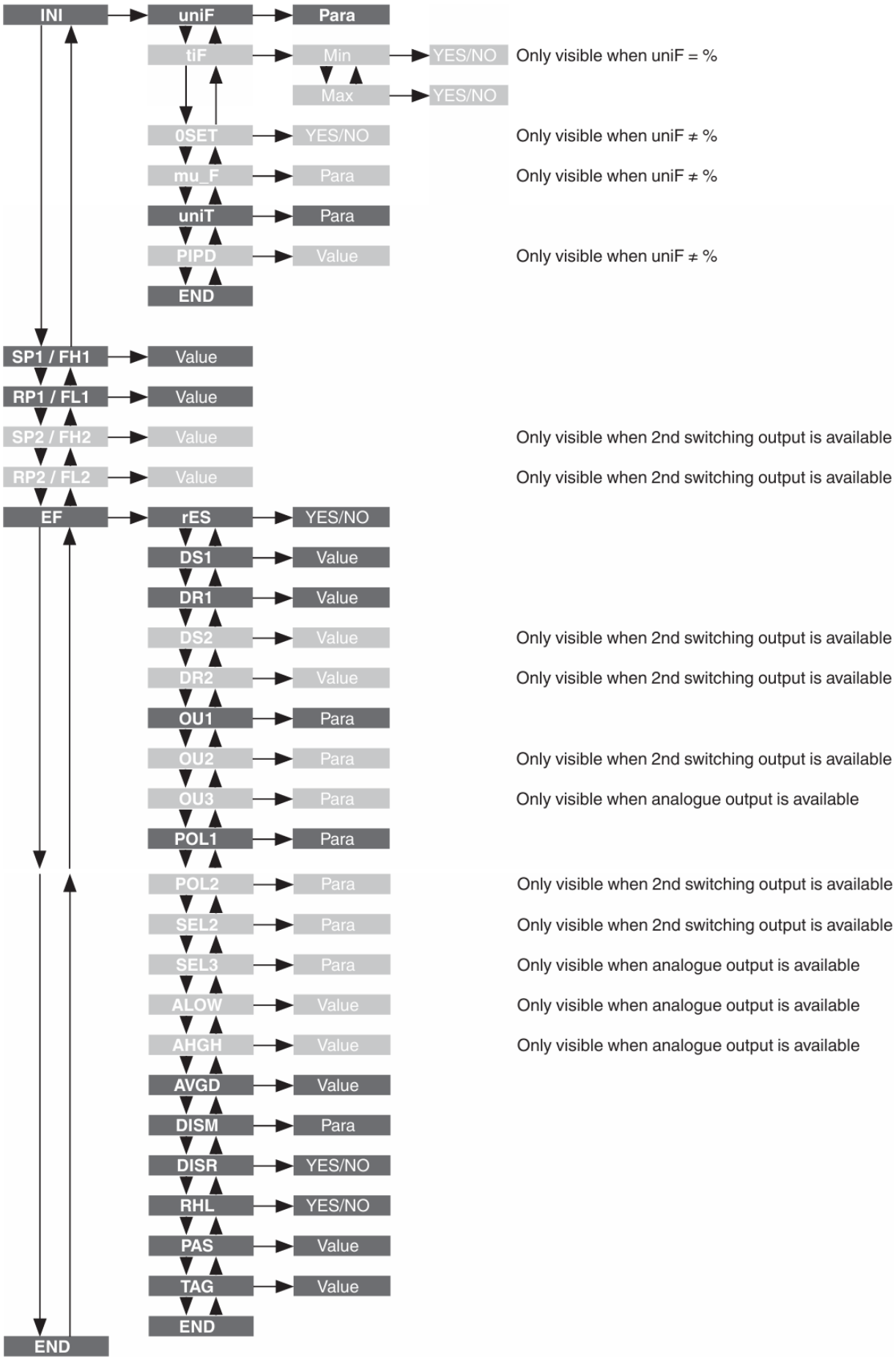
INI
uniF
Para
tiF
Min
YES/NO
Only visible when uniF = %
Max
YES/NO
0SET
YES/NO
Only visible when uniF ≠ %
mu_F
Para
Only visible when uniF ≠ %
uniT
Para
PIPD
Value
Only visible when uniF ≠ %
END
SP1 / FH1
Value
RP1 / FL1
Value
SP2 / FH2
Value
Only visible when 2nd switching output is available
RP2 / FL2
Value
Only visible when 2nd switching output is available
EF
rES
YES/NO
DS1
Value
DR1
Value
DS2
Value
Only visible when 2nd switching output is available
DR2
Value
Only visible when 2nd switching output is available
OU1
Para
OU2
Para
Only visible when 2nd switching output is available
OU3
Para
Only visible when analogue output is available
POL1
Para
POL2
Para
Only visible when 2nd switching output is available
SEL2
Para
Only visible when 2nd switching output is available
SEL3
Para
Only visible when analogue output is available
ALOW
Value
Only visible when analogue output is available
AHGH
Value
Only visible when analogue output is available
AVGD
Value
DISM
Para
DISR
YES/NO
RHL
YES/NO
PAS
Value
TAG
Value
END
END

8.5 Adjustment

Should you wish to adjust the flow switch to local flow conditions, the BFF-3SD offers two ways to make this adjustment.

8.5.1 Adjustment for all units except %

1. Depressurise the system and switch off the flow.
2. Mount the flow switch and connect it electrically. see chapter *Mechanical mounting* and *Electrical connection*
3. Select required flow unit in the “INI” menu under “UNIF”.
4. If there is no flow, select the menu item “0SET” in the “INI” menu, select “YES” and confirm.
5. Set the flow to a known value in the plant.
6. Compare this value with the display and calculate the multiplier for the flow value.

Example: System flow velocity: 2.3 m/s Display FSD-4: 2.5 m/s muF = 2.3 / 2.5 = 0.92

Enter this value in the initialisation menu under “mu_F” and confirm. The multiplier function can also be used without prior zero point adjustment.

8.5.2 Adjustment for flow unit %

1. Depressurise the system and switch off the flow.
2. Mount the flow switch and connect it electrically.
3. Recall menu item “SETF” → “MIN” and confirm “0”.
4. Set the maximum flow in the system.
5. Recall menu item “SETF” → “MAX” and confirm “100”

8.6 Switching functions

Hysteresis function If the flow fluctuates around the set point, the hysteresis keeps the switching status of the outputs stable. With increasing flow velocity, the output switches when reaching the switch point (SP).

- Normally open contact (HNO): Active
- Normally closed contact (HNC): Inactive

With the flow decreasing again, the output will not switch back before the reset point (RP) is reached.

- Normally open contact (HNO): Inactive
- Contact normally closed (HNC): Active

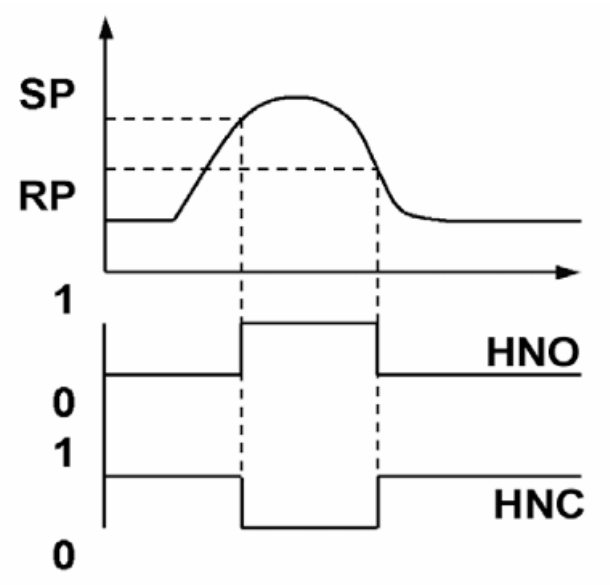

Window function

The window function allows for the control of a defined range. When the flow is between window high (FH) and window low (FL), the output switches on.

- Normally open contact (FNO): Active
- Normally closed contact (FNC): Inactive When the flow is outside window high (FH) and window low (FL), the output does not switch on.
- Normally open contact (FNO): Inactive
- Normally closed contact (FNC): Active

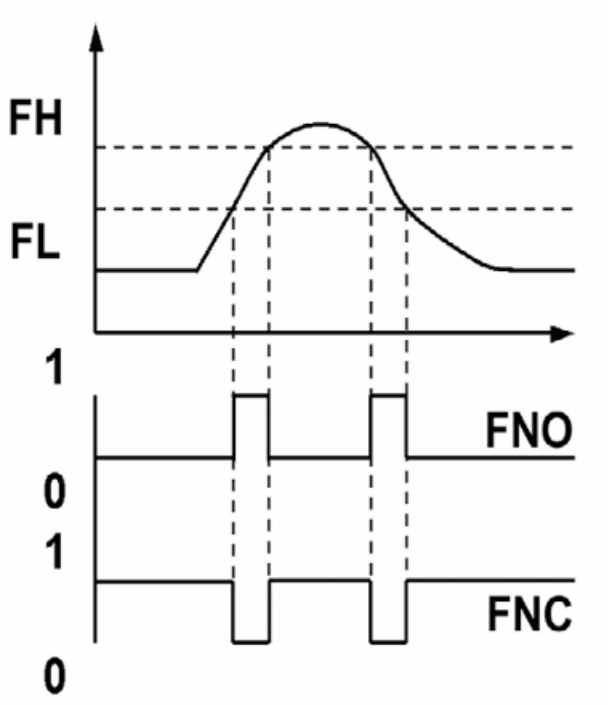

Delay times (0 … 65 s)

This makes it possible to filter out unwanted flow peaks of a short duration or a high frequency (dampening). The flow value must be present for at least a certain pre-set time for the output to switch on. The output does not immediately change its status when it reaches the switching event (SP), but rather only after the pre-set delay time (DS).

If the switching event is no longer present after the delay time, the switch output does not change. The output only switches back when the flow has decreased to the reset point (PR) and stays at or below the reset point (RP) for at least the pre-set delay time (DR).

If the switching event is no longer present after the delay time, the switch output does not change

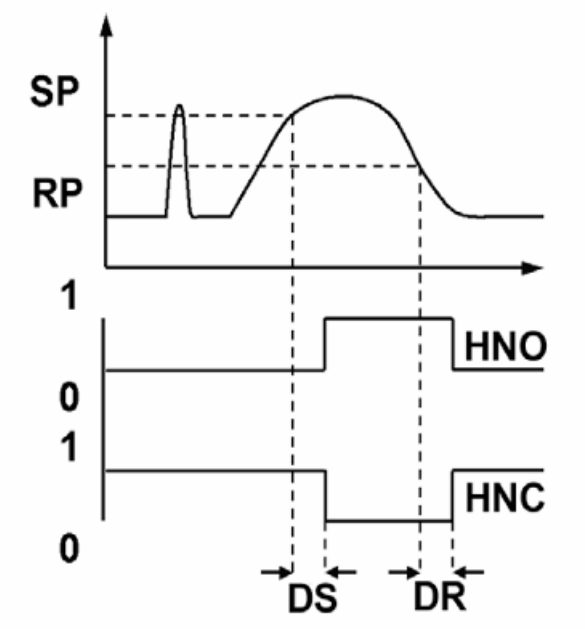

8.7 Dampening function

The time constant “x” specifies the time duration which the digital display, the switching output or the analog signal requires to approach the end value with a deviation of ± 1 % following a change in measured value. After a duration of 2 times “x”, the output value has reached 100 % with a deviation of ± 0.01 % of the prevailing flow.

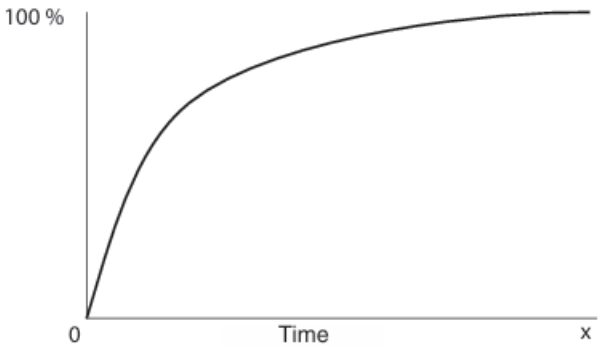

8.8 Operating notes

- Regularly check function of the sensor and all associated components.
- Regularly check for available firmware and security updates.
- Regularly review user accounts, access permissions and security-related settings.

- Take the sensor out of operation whenever there is a malfunction.
- Secure the system against unauthorized use.
- Check fasteners and retighten if needed.

8.9 Cleaning

⚠ CAUTION

Unsuitable cleaning agents
Cleaning with unsuitable cleaning agents may damage the instrument and the product label.
- ► Do not use any aggressive cleaning agents.
- ► Do not use any hard or pointed objects.
- ► Do not use any abrasive cloths or sponges.

Suitable cleaning agents

- Water
- Conventional dishwashing detergent

Cleaning the instrument

1. Disconnect the flow switch from the mains.
2. Wipe the instrument surface using a soft, damp cloth.

8.10 Maintenance

This flow switch is maintenance-free.

9 Decomissioning

Note

Exposure of sensitive data
If the device is not decommissioned properly, sensitive data may be exposed. This can lead to unauthorized access to the device and its data.
- Reset the device to factory settings to remove any remaining data and configurations.

9.1 Dismounting

1. Depressurise and de-energise the flow switch.
2. Disconnect the electrical connection.
3. Unscrew the flow switch with a spanner using the spanner flats.

WARNING

Physical injuries and damage to property and the environment caused by hazardous media
Upon contact with hazardous media (e.g. oxygen, acetylene, flammable or toxic substances), harmful media (e.g. corrosive, toxic, carcinogenic, radioactive), and also with refrigeration plants and compressors, there is a danger of physical injuries and damage to property and the environment.
- ► Should a failure occur, media with extremely high temperature and under high pressure or vacuum may be present at the instrument.
- ► Wear the requisite protective equipment.

WARNING

Risk of burns
During dismounting there is a risk of dangerously hot media escaping. The flow switch may have heated up severely due to hot media.
- ► Let the instrument cool down sufficiently before dismounting it.
- ► Wear the requisite protective equipment.

9.2 Return

WARNING

Physical injuries and damage to property and the environment through residual media Residual media in the dismounted instrument can result in a risk to persons, the environment and equipment.
- ► With hazardous substances, include the material safety data sheet for the corresponding medium.
- ► Clean the instrument, see chapter cleaning.

Strictly observe the following when shipping the instrument:

All instruments delivered to Balluff must be free from any kind of hazardous substances (acids, bases, solutions, etc.) and must therefore be cleaned before being returned.

When returning the instrument, use the original packaging or a suitable transport packaging.

9.3 Disposal

Incorrect disposal can put the environment at risk. Dispose of instrument components and packaging materials in an environmentally compatible way and in accordance with the country-specific waste disposal regulations.



Do not dispose of with household waste. Ensure a proper disposal in accordance with national regulations.

Note

Additional information can be found at www.balluff.com on the product page.

Headquarters and Technical Service Hubs

www.balluff.com/go/contact

Balluff GmbH
Zabergäustraße 8
73765 Neuhausen a.d.F.
Germany

Document version: *2026-11-20 - 460807bf56b479409088cf9c21d931a7c505c4ac*