BALLUFF

BFP-3SA

BFP 3SA2-29V000-R05-AE6-000S04
BFP 3SA2-29V000-R10-AE6-000S04
BFP 3SA2-29V000-R40-AA7-000S04
BFP 3SA2-29V000-R40-AE6-000S04
BFP 3SA2-29V000-R42-AA7-000S04
BFP 3SA2-29V000-R42-AE6-000S04
BFP 3SA2-29V000-R46-AE6-000S04
BFP 3SA2-29V000-R48-AA7-000S04
BFP 3SA2-29V000-R48-AE6-000S04
BFP 3SA2-29V000-R50-AE6-000S04
BFP 3SA2-29V000-R53-AE6-000S04
BFP 3SA2-22V000-R05-AA7-000S04
BFP 3SA2-22V000-R05-AE6-000S04
BFP 3SA2-22V000-R10-AA7-000S04
BFP 3SA2-22V000-R10-AE6-000S04
BFP 3SA2-22V000-R18-AE6-000S04
BFP 3SA2-22V000-R22-AE6-000S04
BFP 3SA2-22V000-R34-AA7-000S04
BFP 3SA2-22V000-R34-AE6-000S04
BFP 3SA2-22V000-R35-AE6-000S04
BFP 3SA2-22V000-R35-AE6-000S04-ABS
BFP 3SA2-22V000-R38-AA7-000S04
BFP 3SA2-22V000-R38-AE6-000S04
BFP 3SA2-22V000-R39-AA7-000S04
BFP 3SA2-22V000-R39-AM9-000Z01
BFP 3SA2-22V000-R40-AA7-000S04
BFP 3SA2-22V000-R40-AE6-000S04
BFP 3SA2-22V000-R41-AA7-000S04
BFP 3SA2-22V000-R42-AA7-000S04
BFP 3SA2-22V000-R42-AE6-000S04
BFP 3SA2-22V000-R43-AE6-000S04
BFP 3SA2-22V000-R45-AE6-000S04
BFP 3SA2-22V000-R46-AA7-000S04
BFP 3SA2-22V000-R46-AE6-000S04
BFP 3SA2-22V000-R48-AA7-000S04
BFP 3SA2-22V000-R48-AE6-000S04
BFP 3SA2-22V000-R53-AA7-000S04
BFP 3SA2-22V000-R53-AE6-000S04
BFP 3SA2-22V000-R56-AA7-000S04
BFP 3SA2-22V000-R56-AE6-000S04
BFP 3SA2-22V000-R58-AA7-000S04
BFP 3SA2-22V000-R58-AE6-000S04

english

Contents

1 About this guide **1**
1.1 Validity . . . 1
1.2 Explanation of the warnings . . . 1
1.3 Symbols and conventions . . . 1

2 Safety notes **3**
2.1 Intended use . . . 3
2.2 General safety notes . . . 3
2.3 Improper use . . . 3
2.4 Personnel qualification . . . 4

3 Scope of delivery, transport and storage **5**
3.1 Scope of delivery . . . 5
3.2 Unpacking . . . 5
3.3 Transport . . . 5
3.4 Storage conditions . . . 5

4 Product Information **6**
4.1 Product description . . . 6
4.2 Technical data . . . 10
4.3 Accessories . . . 12

5 Commissioning **13**
5.1 Mechanical mounting . . . 13
5.2 Electrical mounting . . . 13
5.3 Faults . . . 14
5.4 Maintenance . . . 15
5.5 Cleaning . . . 15

6 Dismounting, return and disposal **16**
6.1 Dismounting . . . 16
6.2 Return . . . 16
6.3 Disposal . . . 16

1 About this guide

1.1 Validity

This guide provides all the information required for the safe use of the BFP 3SA. It applies to the following models: **BFP 3SA…**

This guide was created in English. Other language versions are translations of this guide.

© Copyright 2026, Balluff GmbH Zabergäustraße 8, 73765 Neuhausen auf den Fildern

All contents are protected by copyright. All rights reserved, including the rights of reproduction, distribution, processing and translation.

1.2 Explanation of the warnings

Always observe the warnings in this guide and the measures described to avoid hazards.
The warnings used here contain various signal words and are structured as follows:

SIGNAL WORD

Type and source of the hazard
Consequences if not complied with
- ► Measures to avoid hazards

The individual signal words mean:

NOTICE

Identifies a danger that could **damage or destroy the product**.

⚠ CAUTION

The general warning symbol together with the signal word CAUTION indicates a hazard which can lead to **slight or moderate injuries**.

⚠ WARNING

The general warning symbol together with the signal word WARNING indicates a hazard which can lead to **death or serious injuries**.

⚠ DANGER

The general warning symbol in conjunction with the signal word DANGER identifies a hazard which, if not avoided, will certainly result in **death or serious injury**.

1.3 Symbols and conventions

- Individual instructions are indicated by a preceding triangle.

Action sequences are numbered consecutively:

1. Instruction 1
2. Instruction 2

Numbers unless otherwise indicated are decimals (e.g. 23). Hexadecimal numbers are represented with a preceding 0x (e.g. 0x12AB).

Buttons or selectable menu entries are described in italic and small caps, e.g.Save.

Menu commands are joined with a greater-than sign, e.g. “Settings>Options” stands for the menu command Options from the Settings menu.

Note

Note, tip
This symbol indicates general notes.

2 Safety notes

2.1 Intended use

The model BFP-3SA is a pressure transmitter that is used for pressure measurement in general industrial applications. The instrument may only be used in such applications as are within its technical performance limits, in particular with regard to its material resistance, leakage rate limits and permissible temperature and pressure limits. It is the sole responsibility of the manufacturer or operator of a machine or plant to ensure the suitability of the instrument, and its media resistance, within the application through proper choice of materials and maintenance cycles.

The mounting, dismounting, installation, parameterisation and maintenance of the instrument in industrial environments absolutely requires suitably skilled personnel in accordance with chapter *Personnel qualification*

The instrument meets the EMC Directive in accordance with EN 61326 for emissions (group 1, class B) and immunity (industrial environment). The instrument has been designed and engineered solely for the intended use described here and may only be used accordingly. The manufacturer shall not be liable for claims of any type based on operation contrary to the intended use.

2.2 General safety notes

- The instrument described in the operating instructions has been designed and manufactured using state-of-the-art technology. All components are subject to stringent quality and environmental criteria during production. Our management systems are certified in accordance with ISO 9001 and ISO 14001.
- These operating instructions contain important information on handling the instrument. Working safely requires that all safety notes and work instructions are observed.
- Observe the relevant local accident prevention regulations and general safety regulations for the instrument's range of use.
- The operating instructions are part of the product and must be kept in the immediate vicinity of the instrument and readily accessible to skilled personnel at any time. Pass the operating instructions on to the next operator or owner of the instrument.
- Skilled personnel must have carefully read and understood the operating instructions prior to beginning any work.
- In this document, the generic masculine is used for better readability. Female and other gender identities are explicitly included.
- If available, the provided supplier documentation is also considered to be part of the product in addition to these operating instructions.
- The general terms and conditions contained in the sales documentation shall apply.
- Subject to technical modifications.

2.3 Improper use

- Any use beyond or different to the intended use is considered as improper use.
- Refrain from unauthorised modifications to the instrument.
- Do not use in hazardous areas.
- Do not use in safety or emergency shutdown devices.
- Do not use in applications with hydrogen.
- Do not use in applications with oxygen.
- Do not use in places of use that are not protected from weather influences.

- Do not use in processes with high condensation.
- Do not use in rail vehicles.
- Do not use with abrasive and viscous media.
- Do not use with medical devices.
- Do not use in refrigeration technology.

2.4 Personnel qualification

Note

The activities described in these operating instructions may only be carried out by skilled personnel who have the qualifications described below.

Skilled personnel, authorised by the operator, are understood to be personnel who, based on their technical training, knowledge of measurement and control technology and on their experience and knowledge of country-specific regulations, current standards and directives, are capable of carrying out the work described and independently recognising potential hazards.

WARNING

Before mounting and commissioning the instrument, ensure you read the operating instructions.

3 Scope of delivery, transport and storage

3.1 Scope of delivery

- Pressure sensor
- Basic information
- 3-point measuring protocol

Cross-check scope of delivery with delivery note.

3.2 Unpacking

To ensure that the delivered product is an original product of Balluff GmbH, check the following points when unpacking: The information on the nameplate of the device must match the information on, the delivery note. In case of any doubts of the integrity or authenticity of the product, please contact Balluff sevice.

3.3 Transport

Note

With improper transport, damage to property can occur.
- When unloading packed goods upon delivery as well as during internal transport, proceed carefully and observe the symbols on the packaging.
- With internal transport, observe the instructions in chapter *Storage conditions*

Check the instrument for any damage that may have been caused. In the event of any damage, do not commission the instrument and contact the manufacturer immediately.

3.4 Storage conditions

Do not remove packaging until just before mounting. Keep the packaging as it will provide optimum protection during transport (e.g. change in installation site, sending for repair).

Permissible conditions at the place of storage:

Storage temperature: -40 … +70°C [-40 … +158 °F]

4 Product Information

This section provides information about the product features and specifications.

4.1 Product description

4.1.1 Function

A pressure sensor is used to measure the pressure of liquids or gases in machines and industrial systems. The applied pressure is converted into an electrical signal, which is then processed electronically and provided as a measurement value. Depending on the device version, the measured pressure value is transmitted via the corresponding interface as either an analog or a digital output signal.

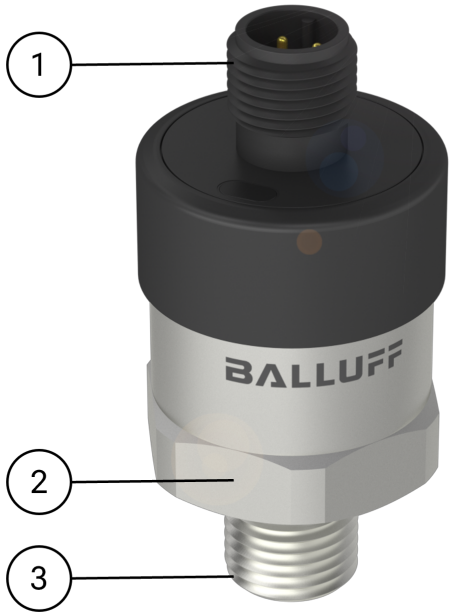

1 Electrical connection
2 Spanner flats
3 Process connection

Fig. 1: Operating elements

Electrical connection: The electrical connection is made via a plug connection (see *Type code*).

Housing: Robust housing containing the sensor electronics and pressure sensing components.

Process connection: The sensor is mounted to the application via a standardized process connection. Various process connection types are available depending on the application requirements (see *Type code*).

Note

The sensor does not have a visual status indicator.

4.1.2 Construction

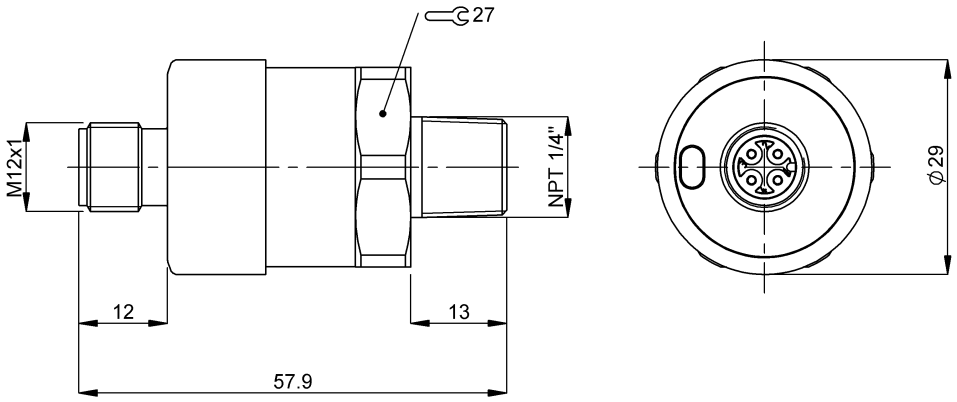

Fig. 2: BFP 3SAx-02X000-... with Male Thread NPT 1/4”

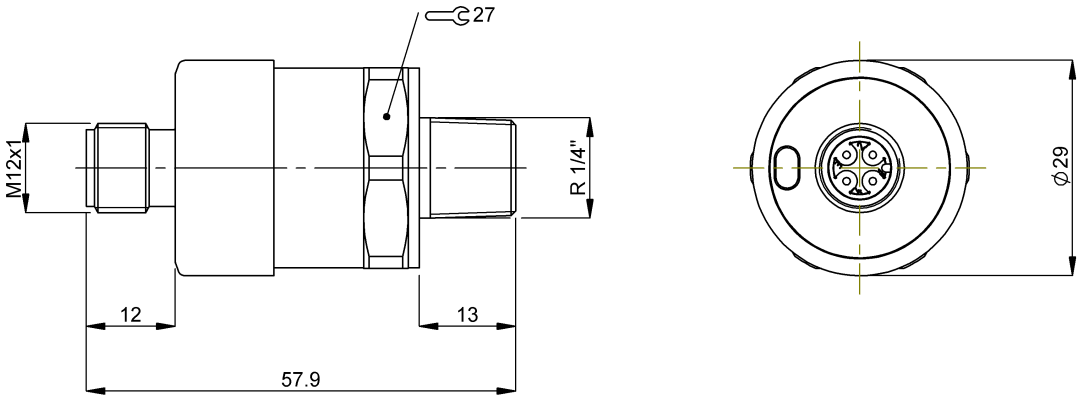

Fig. 3: BFP 3SAx-05X000-... with Male thread R1/4”

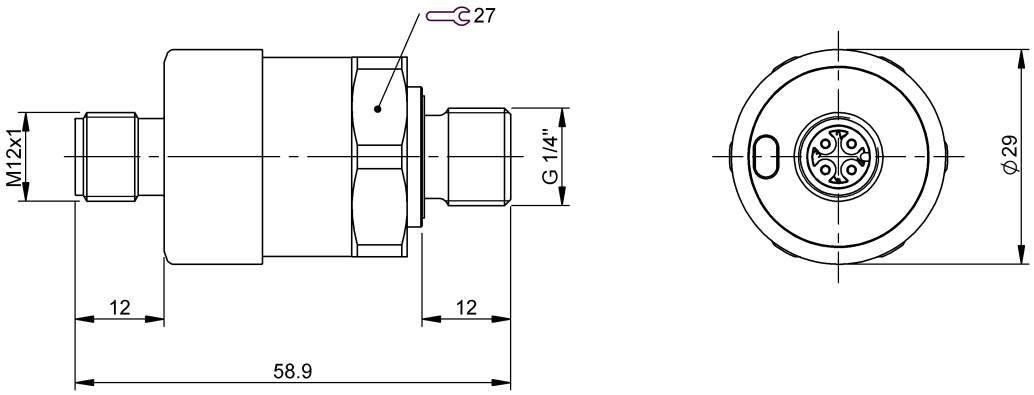

Fig. 4: BFP 3SAx-22V000-… with Male Thread G 1/4”

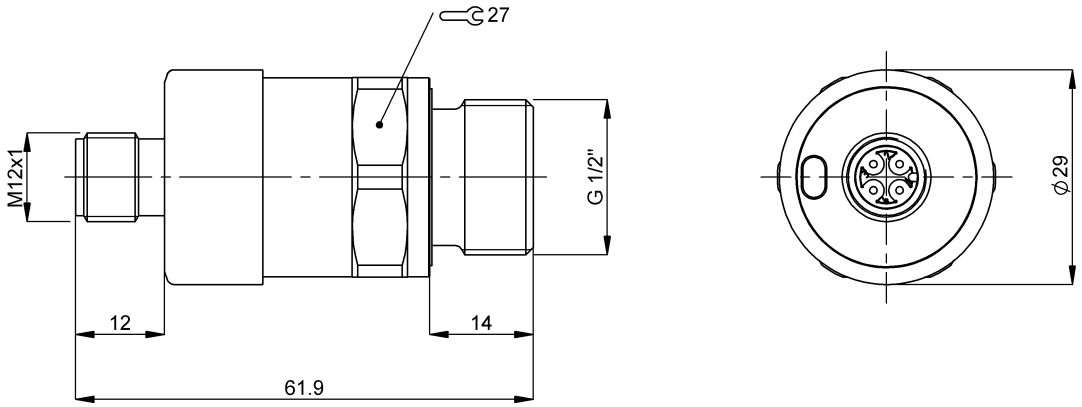

Fig. 5: BFP 3SAx-29V000-… with Male Thread G 1/2”

4.1.3 Labeling

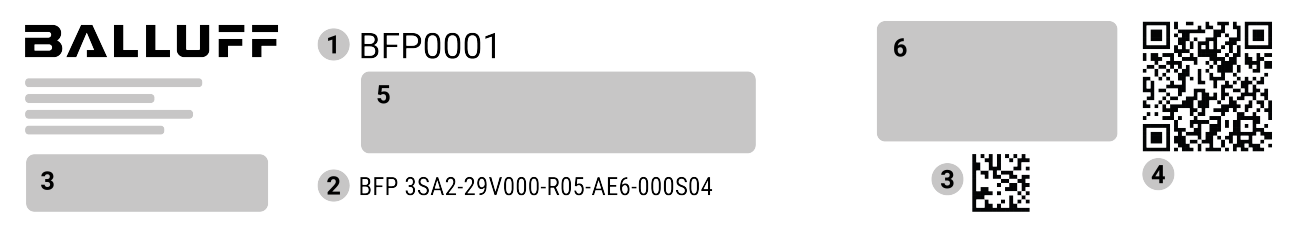

1 Order code
2 Type code
3 Serial number
4 QR-Code
5 Operating voltage and Measuring range
6 Approvals

Fig. 6: Label, example

4.1.4 Type code

Example	BFP	3SA2	-	29V000	-	R05	-	AE6	-	000S04
Definition	BFP	3S***ab***	-	***ccd***000	-	R***ee***	-	***ffg***	-	000S04

Table 1: Type code variant details

Code	Parameter	Meaning
BFP 3S	Sensor type	Balluff Fluid Sensor Pressure
a	Design	• A = Transmitter with pressure compensation vent
b	Overload pressure	• 2 = 2 × measuring range
cc	Process connection	• 02 = Male Thread NPT 1/4” • 05 = Male thread R1/4” • 22 = Male thread G1/4” • 29 = Male thread G1/2”
d	Process connection sealing material	• V = FKM (Viton) • X = No sealing ring

continues on next page

Table 1 – continued from previous page

Code	Parameter	Meaning
Ree	Measurement range	• R01 = −1…0 bar • R05 = −1…2 bar • R10 = −1…10 bar • R18 = −1…39 bar • R22 = −1…60 bar • R32 = 0…1 bar • R34 = 0…2 bar • R35 = 0…2.5 bar • R38 = 0…5 bar • R39 = 0…6 bar • R40 = 0…10 bar • R41 = 0…16 bar • R42 = 0…20 bar • R43 = 0…25 bar • R45 = 0…40 bar • R46 = 0…50 bar • R48 = 0…100 bar • R50 = 0…160 bar • R53 = 0…250 bar • R56 = 0…400 bar • R58 = 0…600 bar
ff	Output type	• AA = Analog output, 0…10 V, rising • AE = Analog output, 4…20 mA, rising • AM = Analog output, 0.5…4.5 V, ratiometric, 3-wire
g	Operating voltage	• 6 = 8…30 V DC • 7 = 14…30 V DC • 9 = 5 V DC
000S04	Electrical connection	M12 plug, 4-pin

4.2 Technical data

Note

Further data can be found at **www.balluff.com** on the product page.

4.2.1 Specifications

Depending on the selected instrument version (e.g. seals) the specification may deviate from the specifications listed here. The specifications in the order documentation are definitive.

Table 2: Specifications

Specification	Condition / Description	Value
Measuring range	See product label / see *Type code*	
Maximum working pressure	Corresponds to the upper measuring range value / measuring range full-scale value. Any permanent operation above the maximum working pressure is not permissible.	
Overpressure limit	The overpressure limit is based on the measuring range. Depending on the selected process connection and the seal, restrictions in the overpressure limit can result.	
Overpressure limit		2 times
Pollution degree		2
Overvoltage category		I
Ingress protection (IP code) per IEC 60529		IP67
Service life	Measuring range ≥ 600 bar [≥ 8,000 psi]	10 million load cycles
Service life	Measuring range > 0.1 bar [> 1 psi]	100 million load cycles
Vacuum resistance		Yes
Output signal		See product label
Auxiliary power		See product label
Current supply		See product label
Settling time per IEC 61298-2	Measuring range ≥ 0.4 bar [≥ 5.8 psi]	< 1 ms
Switch-on time	Measuring range ≥ 0.4 bar [≥ 5.8 psi]	< 15 ms
Pin assignment		See product label
Short-circuit resistance		S+ vs. U-
Reverse polarity protection		U+ vs. U-; no reverse polarity protection with ratiometric output signal
Material (wetted)	< 10 bar [< 150 psi]	Stainless steel 316L
Material (wetted)	≥ 10 bar [≥ 150 psi]	Stainless steel 316L and PH grade steel
Material (wetted)	≤ 25 bar abs. [≤ 400 psi abs.]	Stainless steel 316L
Material (wetted)	Seal for each process connection	See data sheet
Humidity		0 … 90 % relative humidity (non-condensing)
Operating altitude		≤ 2,000 m above sea level

4.2.2 Maximum measured error

Table 3: Maximum measured error

Measuring range	Maximum measured error per IEC 61298-2
Measuring ranges ≥ 0.6 bar [≥ 8.7 psi]	≤ ±1 % of span

Additional zero point error depending on the mounting position for measuring range ≤ 1 bar [≤ 15 psi]:

Mounting position 180°, vertical, top process connection

- ≤ 1 mbar [≤ 0.015 psi]

Mounting position 90°, horizontal

- ≤ 0.6 mbar [≤ 0.009 psi]

4.2.3 Operating conditions

Table 4: Operating conditions

Operating conditions	Medium temperature limit	Ambient temperature limit	Storage temperature limit
Temperature ranges	-30 … +100 °C [-22 … +212 °F]	-30 … +100 °C [-22 … +212 °F][1]	-40 … +70 °C [-40 … +158 °F]

4.3 Accessories

Accessories are not included in the scope of delivery and must be ordered separately.

Note

Recommended accessories can be found at www.balluff.com on the product page.

1 Only for enclosed and condensation-protected installation locations.

5 Commissioning

⚠ CAUTION

Damage to property due to exceeding the performance limits
Exceeding the performance limits can destroy the instrument and lead to danger in the end-use application.
- Any permanent operation in the overload range is not permissible.
- Do not exceed the overpressure limit at any time.

5.1 Mechanical mounting

- Only use the instrument if it is in perfect condition with respect to safety.
- Prior to commissioning, subject the instrument to a visual inspection.
- Leaking liquid is indicative of damage.
- Obvious damage must be reported immediately.

5.2 Electrical mounting

Voltage supply

- For auxiliary power, see product label / see *Type code*

This instrument is intended for operation with low voltages, which are separated from the AC 230 V (50 Hz) mains voltage – or voltages greater than AC 50 V or DC 120 V for dry environments.

A connection to an SELV circuit is recommended, or alternatively to circuits with a different protective measure in accordance with IEC 60364-4-41 installation standard.

For instruments with North American certification per UL/CSA IEC 61010-1

The supply for the instrument must be made via a limited-energy circuit in accordance with section 9.4 of UL/IEC/ EN 61010-1 or an LPS per UL/IEC/EN 62368-1 or class 2 in accordance with UL1310/UL1585 (NEC or CEC).

The voltage supply must be suitable for operation above 2,000 m should the instrument be used at this altitude.

Shielding and grounding

Ground the instrument via the process connection.

Pin assignment

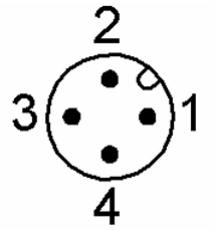

Fig. 1: M12 plug pin assignment (view on pin side)

Table 1: M12 plug pin assignment

Pin	2-wire signal	3-wire signal	Description
1	U+	U+	Positive power supply
2	NC	NC	Not connected
3	U-	U-	Negative power supply
4	NC	S+	Analog output

Note

For pin assignments, see also product label

5.3 Faults

Note

If faults cannot be eliminated by means of the listed measures, take the instrument out of operation immediately.
- Contact the manufacturer
- If a return is needed, please follow the instructions given in chapter *Return*

Note

Additional information can be found at www.balluff.com on the product page.

Note

No action needs to be taken if plastic parts (e.g. electrical connection) become discoloured. Discolouration is harmless.

In the event of any faults, first check whether the instrument is mounted correctly, mechanically and electrically.

Table 2: Faults

Faults	Causes	Measure
No output signal	Cable break	Check the continuity
Signal span drops / too small	Mechanical overload caused by overpressure	Replace the instrument; if it fails repeatedly, contact the manufacturer
Signal span drops / too small	Seal / Sealing face damaged or soiled, seal does not have a tight fit, threads jammed	Clean the seal / sealing face, replace the seal if applicable
Signal span drops / too small or varies/inaccurate	EMC interference sources in the environment, e.g. frequency converter	Shield instrument; cable shield; remove source of interference
Signal span varies/inaccurate	Working temperature too high/low	Lower/increase the temperature
Deviating zero point signal	Working temperature too high/low	Observe the permissible temperatures
Deviating zero point signal	Overpressure limit exceeded	Observe the permissible overpressure limit
Constant output signal upon change in pressure	Mechanical overload caused by overpressure	Replace the instrument; if it fails repeatedly, contact the manufacturer

5.4 Maintenance

This instrument is maintenance-free. Repairs must only be carried out by the manufacturer.

5.5 Cleaning

Only use commercially available and solvent-free cleaning agents.

6 Dismounting, return and disposal

WARNING

Physical injuries and damage to property and the environment due to hazardous media Upon contact with hazardous media (e.g. oxygen, acetylene, flammable or toxic substances) and harmful media (e.g. corrosive, toxic,carcinogenic, radioactive), there is a danger of physical injuries and damage to property and the environment. In the event of a fault, hazardous media under high pressure or vacuum may be present at the instrument.

- For these media, in addition to all standard regulations, the appropriate existing codes or regulations must also be followed.

6.1 Dismounting

Only dismount the instrument when it is depressurised and deenergised.

6.2 Return

Strictly observe the following when shipping the instrument:

- All instruments delivered to Balluff must be free from any kind of hazardous substances (acids, bases, solutions, etc.) and must therefore be cleaned before being returned, see chapter *Cleaning*
- When returning the instrument, use the original packaging or a suitable transport packaging.

To avoid damage:

1. Place the instrument in the packaging and evenly pad with shock-absorbent material.
2. If possible, place a bag, containing a desiccant, inside the packaging.
3. Label the shipment as transport of a highly sensitive measuring instrument.

Note

Additional information can be found at www.balluff.com on the product page.

6.3 Disposal

Incorrect disposal can put the environment at risk. Dispose of instrument components and packaging materials in an environmentally compatible way and in accordance with the country-specific waste disposal regulations.

Disposal of electrical appliances



Do not dispose of with household waste. Ensure a proper disposal in accordance with national regulations.

Headquarters and Technical Service Hubs

www.balluff.com/go/contact

Balluff GmbH
Zabergäustraße 8
73765 Neuhausen a.d.F.
Germany

Document version: *2026-11-20 - 1ea03702614c0c47725fcf4628a2907854077b83*