BALLUFF

# BFP-3SD

BFP 3SD2-03X000-R48-LC5-000S04
BFP 3SD2-03X000-R48-UE5-000S04
BFP 3SD2-03X000-R53-LC5-000S04
BFP 3SD2-03X000-R53-UE5-000S04
BFP 3SD2-32V000-R05-LC5-000S04
BFP 3SD2-32V000-R05-UE5-000S04
BFP 3SD2-32V000-R07-LC5-000S04
BFP 3SD2-32V000-R07-UE5-000S04
BFP 3SD2-32V000-R10-LC5-000S04
BFP 3SD2-32V000-R10-UE5-000S04
BFP 3SD2-32V000-R34-LC5-000S04
BFP 3SD2-32V000-R34-UE5-000S04
BFP 3SD2-32V000-R38-LC5-000S04
BFP 3SD2-32V000-R38-UE5-000S04
BFP 3SD2-32V000-R40-LC5-000S04
BFP 3SD2-32V000-R40-UE5-000S04
BFP 3SD2-32V000-R42-LC5-000S04
BFP 3SD2-32V000-R42-UE5-000S04
BFP 3SD2-32V000-R46-LC5-000S04
BFP 3SD2-32V000-R46-UE5-000S04
BFP 3SD2-32V000-R48-LC5-000S04
BFP 3SD2-32V000-R48-UE5-000S04
BFP 3SD2-32V000-R49-LC5-000S04
BFP 3SD2-32V000-R49-UE5-000S04
BFP 3SD2-32V000-R53-LC5-000S04
BFP 3SD2-32V000-R53-UE5-000S04
BFP 3SD2-32V000-R58-LC5-000S04
BFP 3SD2-32V000-R58-UE5-000S04
BFP 3SDF-32V000-R56-LC5-000S04
BFP 3SDF-32V000-R56-UE5-000S04
BFP 3SD2-24X000-R05-LC5-000S04
BFP 3SD2-24X000-R05-UE5-000S04
BFP 3SD2-24X000-R10-LC5-000S04
BFP 3SD2-24X000-R10-UE5-000S04
BFP 3SD2-24X000-R20-LC5-000S04
BFP 3SD2-24X000-R20-UE5-000S04
BFP 3SD2-24X000-R34-LC5-000S04
BFP 3SD2-24X000-R34-UE5-000S04
BFP 3SD2-24X000-R38-LC5-000S04
BFP 3SD2-24X000-R38-UE5-000S04
BFP 3SD2-24X000-R40-LC5-000S04
BFP 3SD2-24X000-R40-UE5-000S04

**english**

# Contents


**1 About this guide** **1**
1.1 Validity . . . 1
1.2 Disclaimer . . . 1
1.3 Explanation of the warnings . . . 1
1.4 Symbols and conventions . . . 2
1.5 Technical terms and abbreviations used . . . 2

**2 Safety notes** **4**
2.1 Intended use . . . 4
2.2 Reasonably foreseeable misuse . . . 4
2.3 General safety notes . . . 4

**3 Scope of delivery, transport and storage** **6**
3.1 Scope of delivery . . . 6
3.2 Unpacking . . . 6
3.3 Transport . . . 6
3.4 Storage conditions . . . 6

**4 Product Information** **7**
4.1 Product description . . . 7
4.2 Technical data . . . 11
4.3 Accessories . . . 12

**5 Interfaces and communication** **13**
5.1 Display elements . . . 13
5.2 Error indications and signals . . . 13

**6 IO-Link interface reference** **16**
6.1 Primary device functions . . . 16
6.2 System functions . . . 26

**7 Installation and connection** **28**
7.1 Installation . . . 28
7.2 Electrical connection . . . 28
7.3 Shielding and cable routing . . . 29

**8 Commissioning** **30**
8.1 Before you begin . . . 30
8.2 Post-commissioning measures . . . 30
8.3 Adjustability of zero point . . . 30

**9 Operation and maintenance** **31**
9.1 Startup . . . 31
9.2 Operation . . . 31
9.3 Overview of parameters . . . 31
9.4 Menu tree . . . 33
9.5 Operating notes . . . 35
9.6 Cleaning . . . 35
9.7 Maintenance . . . 35

**10 Decomissioning** **36**
10.1 Dismounting . . . 36
10.2 Return . . . 36
10.3 Disposal . . . 37

# 1 About this guide

## 1.1 Validity

This guide provides all the information required for the safe use of the BFP 3SD. It applies to the following models:

**BFP 3SD…**

This guide was created in English. Other language versions are translations of this guide.

© Copyright 2026, Balluff GmbH Zabergäustraße 8, 73765 Neuhausen auf den Fildern

All contents are protected by copyright. All rights reserved, including the rights of reproduction, distribution, processing and translation.

## 1.2 Disclaimer

The following description is provided free of charge and is a general application example. The description should support the programming and planning of PLC applications and illustrate possible solutions. The user has no claim to warranty, error correction or updates. In particular, any claims for compensation that could result from the use of this description are excluded. This liability limitation excludes

- (a) damages due to loss of life, personal injury or harm to health,
- (b) liability in accordance with the Product Liability Act and -
- (c) cases of intent.

Prior to implementation in systems and machines, please check whether the description provided here is intended for your application. The use of this free description shall be deemed to imply acceptance of the warranty and liability limitation!

## 1.3 Explanation of the warnings

Always observe the warnings in this guide and the measures described to avoid hazards.
The warnings used here contain various signal words and are structured as follows:

**SIGNAL WORD**

**Type and source of the hazard**
Consequences if not complied with
► Measures to avoid hazards

The individual signal words mean:

***NOTICE***

Identifies a danger that could **damage or destroy the product**.

**⚠ CAUTION**

The general warning symbol together with the signal word CAUTION indicates a hazard which can lead to **slight or moderate injuries**.

**WARNING**

The general warning symbol together with the signal word WARNING indicates a hazard which can lead to **death or serious injuries**.

**DANGER**

The general warning symbol in conjunction with the signal word DANGER identifies a hazard which, if not avoided, will certainly result in **death or serious injury**.

## 1.4 Symbols and conventions

- Individual instructions are indicated by a preceding triangle.

Action sequences are numbered consecutively:

1. Instruction 1
2. Instruction 2

**Numbers** unless otherwise indicated are decimals (e.g. 23). Hexadecimal numbers are represented with a preceding 0x (e.g. 0x12AB).

**Buttons** or selectable menu entries are described in italic and small caps, e.g.Save.

**Menu commands** are joined with a greater-than sign, e.g. “Settings>Options” stands for the menu command Options from the Settings menu.

**Note**

Note, tip
This symbol indicates general notes.

## 1.5 Technical terms and abbreviations used

**ADT**
Fieldbus Autodetection

**BET**
Balluff Engineering Tool

**DID**
Device ID

**EIP**
EtherNet/IP

**I/O**
Input/Output

**IOL**
IO-Link

**ISDU**
IO-Link Parameter (Index Service Data Unit)

**MBT**
Modbus

**PLC**
Programmable Logic Controller

**PNT**
Profinet

**SIO**
Standard IO Mode

**VID**
Vendor ID

# 2 Safety notes

## 2.1 Intended use

The pressure switch may only be used in such applications as are within its technical performance limits, in particular with regard to its material resistance limit, leakage rate limits and permissible temperature and pressure limits. It is the sole responsibility of the manufacturer or operator of a machine or plant to ensure the suitability of the pressure switch, and its media resistance, within the application through proper choice of materials and maintenance cycles. For performance limits, see chapter 9 “Specifications”.

Special versions for oil and grease-free applications, as well as for use with oxygen (dangerous fluid in accordance with Directive 2014/68/EU Article 13, Regulation (EC) No. 1272/2008, or GHS[1]), are available on request. The mounting, dismounting, installation, parameterisation and maintenance of the pressure switch in industrial environments absolutely requires suitably skilled personnel in accordance with section qualified personnel below. The instrument has been designed and built solely for the intended use described here, and may,only be used accordingly. The manufacturer shall not be liable for claims of any type based on operation contrary to the intended use.

## 2.2 Reasonably foreseeable misuse

The product is not intended for the following applications and areas and may not be used there:

- in safety-oriented applications in which personal safety or the safety of machinery and equipment depends on the device function
- in explosive atmospheres
- in areas with food contact
- for processing personal data in accordance with the GDPR
- for processing financial transactions
- in unauthorised modifications to the pressure switch
- for use in hazardous areas
- for use with abrasive or unstable fluids, in particular hydrogen

## 2.3 General safety notes

Activities such as **installation**, **connection** and **startup** may only be carried out by qualified personnel.

**Qualified personnel** are persons whose technical training, cyber security training, knowledge and experience as well as knowledge of the relevant regulations allows them to assess the work assigned to them, recognize possible hazards and take appropriate safety measures.

The **operator** is responsible for ensuring compliance with local safety regulations, maintaining a safe and cyber-secure operating environment, and taking appropriate measures to ensure that a defect in the product will not result in hazards to persons or equipment. This includes assessing cybersecurity risks and implementing the necessary cybersecurity measures for the operation of the machine.

The product must not be opened, modified or changed. If defects and unresolvable faults occur in the product, take it out of service and secure against unauthorized use.

Inadequate isolation of the product may result in damage and malfunction of the product or in the application due to unauthorized access or modification of data and settings or product availability.

1 Globally Harmonized System of Classification, Labelling and Packaging of Chemicals

**⚠ WARNING**

Before mounting and commissioning the instrument, ensure you read the operating instructions.

# 3 Scope of delivery, transport and storage

## 3.1 Scope of delivery

- Pressure sensor
- Basic information
- 3-point measuring protocol

Cross-check scope of delivery with delivery note.

## 3.2 Unpacking

To ensure that the delivered product is an original product of Balluff GmbH, check the following points when unpacking: The information on the nameplate of the device must match the information on the delivery note. In case of any doubts of the integrity or authenticity of the product, please contact Balluff sevice.

## 3.3 Transport

**Note**

With improper transport, damage to property can occur.
- When unloading packed goods upon delivery as well as during internal transport, proceed carefully and observe the symbols on the packaging.
- With internal transport, observe the instructions in chapter storage-conditions

Check the pressure sensor for any damage that may have been caused by transport. Obvious damage must be reported immediately.

## 3.4 Storage conditions

Do not remove packaging until just before mounting. Keep the packaging as it will provide optimum protection during transport (e.g. change in installation site, sending for repair).

- Store the device in a physically secured location with controlled access.
- Store product in original packaging.
- Observe ambient conditions.

**Permissible conditions at the place of storage:**

- Storage temperature: -20 … +70 °C [-4 … +158 °F]

# 4 Product Information

This section provides information about the product features and specifications.

## 4.1 Product description

### 4.1.1 Function

A pressure sensor is used to measure the pressure of liquids or gases in machines and industrial systems. The applied pressure is converted into an electrical signal, which is then processed electronically and provided as a measurement value. Depending on the device version, the measured pressure value is transmitted via the corresponding interface as either an analog or a digital output signal.




**1** Digital display
**2** Electrical connection
**3** Spanner flats
**4** Process connection

**Electrical connection:** The electrical connection is made via a plug connection (see *Type code*).

**Housing:** Robust housing containing the sensor electronics and pressure sensing components.

**Display:** The display shows the current process value and is used for parameterization and device configuration.

**Process connection:** The sensor is mounted to the application via a standardized process connection. Various process connection types are available depending on the application requirements (see *Type code*).

### 4.1.2 Construction

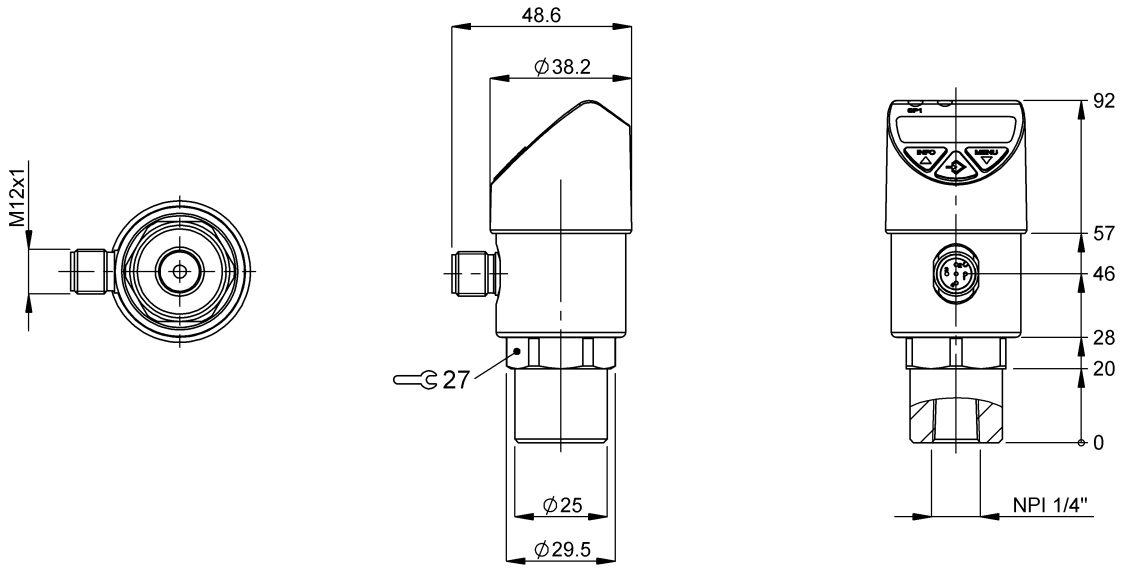


Fig. 1: BFP 3SD2-03X000-… with Female thread NPT 1/4”

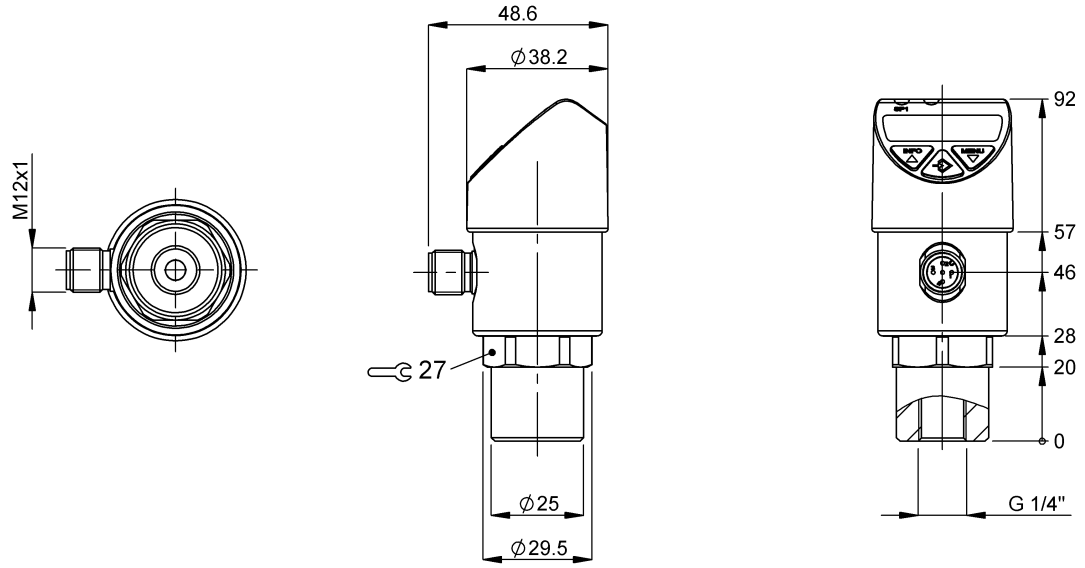


Fig. 2: BFP 3SD2-24V000-… with Female Thread G 1/4”

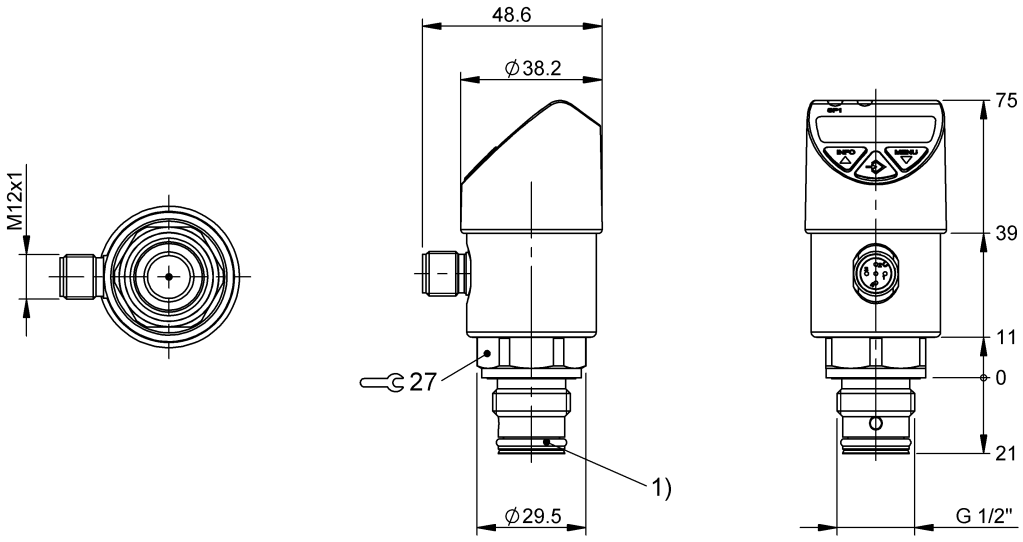


**1** Sealing ring

Fig. 3: BFP 3SD2-32V000-… with Flush-Mounted Male Thread G 1/2”

### 4.1.3 Labeling

If the serial number becomes illegible (e.g. due to mechanical damage or overpainting), traceability will no longer be possible.

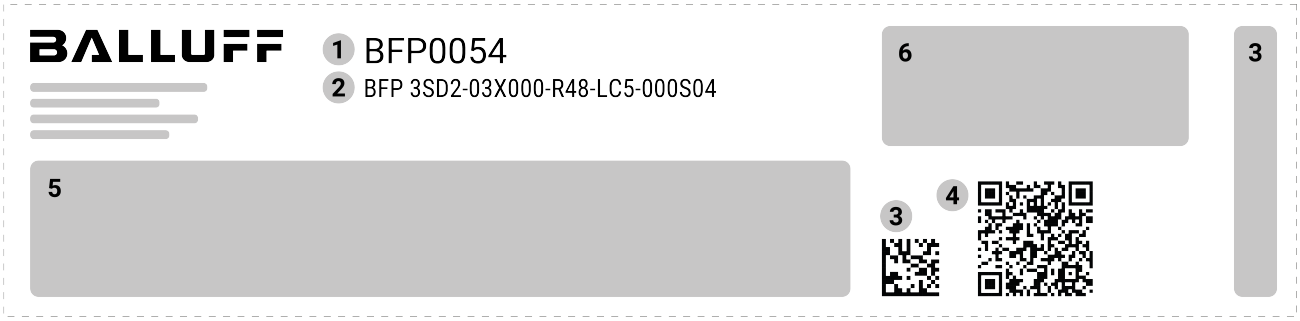


**1** Order code
**2** Type code
**3** Serial number
**4** QR-Code
**5** Operating voltage and Measuring range
**6** Approvals

Fig. 4: Part label (example)

### 4.1.4 Type code

| | | | | | | | | | | |
|---|---|---|---|---|---|---|---|---|---|---|
| Example | BFP | 3SD2 | - | 32V000 | - | R05 | - | UE5 | - | 000S04 |
| Definition | BFP | 3S***ab*** | - | ***ccd***000 | - | R***ee*** | - | ***fgh*** | - | 000S04 |

Table 1: Type code variant details

| Code | Parameter | Meaning |
|---|---|---|
| BFP 3S | Sensor type | Balluff Fluid Sensor Pressure |
| *a* | Design | • D = Display device with three buttons and pressure compensation vent |
| *b* | Pressure resistance | • 2 = Dual measurement range |
| *cc* | Process connection | • 03 = Female thread 1/4" NPT<br>• 24 = Female thread G1/4"<br>• 32 = Flush-mounted male thread G1/2" |
| *d* | Process connection sealing material | • V = FKM (Viton)<br>• X = No sealing ring |
| R*ee* | Measurement range | • R05 = −1…2 bar<br>• R07 = −1…3 bar<br>• R10 = −1…10 bar<br>• R20 = −1…50 bar<br>• R34 = 0…2 bar<br>• R38 = 0…5 bar<br>• R40 = 0…10 bar<br>• R42 = 0…20 bar<br>• R46 = 0…50 bar<br>• R48 = 0…100 bar<br>• R49 = 0…120 bar<br>• R53 = 0…250 bar<br>• R56 = 0…400 bar<br>• R58 = 0…600 bar |
| *f* | Interface | • L = IO-Link with analog output<br>• U = IO-Link |
| *g* | Interface version and output | • C = IO-Link V1.1, COM2, one PNP/NPN switching output and analog output, 4…20 mA or 0…10 V<br>• E = IO-Link V1.1, COM2, two PNP switching outputs |
| *h* | Operating voltage | • 5 = 15…35 V DC |
| 000S04 | Electrical connection | M12 connector, 4-pin |

## 4.2 Technical data

Depending on the selected instrument version (e.g. seals), the specification may deviate from the specifications listed here. The specifications in the order documentation are definitive.

### 4.2.1 Specifications

Table 2: Specifications

| | |
|---|---|
| **Measuring range** | See product label |
| **Maximum working pressure** | Equals the upper range value / full scale value |
| **Overpressure limit** | |
| Measuring ranges ≤ 600 bar [≤ 7,500 psi]: | 2 times |
| **Max. measured error per IEC 61298-2** | ≤ ±0.5 % of span |
| **Accuracy of the switch point** | ≤ ±0.5 % of span |
| **Switching current** | Max. 250 mA per switching output |
| **Switching voltage** | Supply voltage - 1 V |
| **Temperature error (0 … 80 °C [32 … 176 °F])** | |
| For all process connections with pressure port | ≤ ±1.5 % of span |
| With G ½ B flush | ≤ ±2.5 % of span |
| **Vacuum resistance** | Yes |
| **Output signal** | See product label |
| **Supply voltage** | DC 15 … 35 V |
| **Current supply** | Max. 600 mA including switching current |
| **Pin assignment** | See product label and connection diagram in chapter *Electrical connection* |
| **Short-circuit resistance** | S+ / SP1 / SP2 vs. U- |
| **Reverse polarity protection** | U+ vs. U- |
| **Insulation voltage** | DC 500 V |

### 4.2.2 Materials

Table 3: Specifications

| | |
|---|---|
| Measuring ranges < 10 bar [150 psi] | Stainless steel 316L |
| Measuring ranges ≥ 10 bar [150 psi] | Stainless steel 316L, PH grade steel |

### 4.2.3 Ambient conditions

Table 4: Specifications

| | |
|---|---|
| Pressure transmission medium | |
| For all gauge pressure measuring ranges < 10 bar [150 psi], all absolute pressure measuring ranges and G ½ flush | Synthetic oil |
| **Medium temperature limit** | |
| Process connections with pressure port and G ½ B flush | -20 … +85 °C [-4 … +185 °F] |
| **Ambient temperature limit** | -20 … +80 °C [-4 … +176 °F] |
| **Storage temperature limit** | -20 … +70 °C [-4 … +158 °F] |
| **Service life** | |
| Switching cycles | 100 million |
| Load cycle (mechanical) | 100 million (or 10 million for measuring ranges > 600 bar / 7,500 psi) |

## 4.3 Accessories

Accessories are not included in the scope of delivery and must be ordered separately.

**Note**

Recommended accessories can be found at www.balluff.com on the product page.

# 5 Interfaces and communication

This section provides information about the interfaces and communication.

## 5.1 Display elements

The figure below shows the display elements, status indicators, and operating functions of the device.




1 **Status LED:** Status of switching output 1; status of switching output 2
2 **4-digit LED display:** Display of pressure; display of menu item; display of parameter
3 **INFO Button: Display mode:** Short press: Display of unit; Long presse: Display of the parameters. **Programming mode:** Short press: Menu up, Parameter value up (step-wise); Long press: Menu up, Parameter value up (fast).
4 **CONFIRMATION button: Display mode:** Short press: Display of unit. **Programming mode:** Short press: Selection of menu item, Confirmation of input.
5 **MENU Button: Display mode:** Short press: Display of unit; Long presse: Jumping into the programming mode. **Programming mode:** Short press: Menu down, Parameter value up (step-wise); Long press: Menu down, Parameter value up (fast).

Fig. 1: Display element

## 5.2 Error indications and signals

**⚠ CAUTION**

**Physical injuries and damage to property and the environment**
If faults cannot be eliminated by means of the listed measures, the pressure switch must be taken out of operation immediately.
- ► Ensure that pressure or signal is no longer present and protect against accidental commissioning.
- ► Contact the manufacturer.
- ► If a return is needed, please follow the instructions given in chapter *Return*.

**⚠ WARNING**

**Physical injuries and damage to property and the environment caused by hazardous media**
Upon contact with hazardous media (e.g. oxygen) and also with refrigeration plants and compressors, there is a danger of physical injuries and damage to property and the environment.
- ▸ Should a failure occur, media with extremely high temperature and under high pressure or vacuum may be present at the instrument.
- ▸ For these media, in addition to all standard regulations, the appropriate existing codes or regulations must also be followed.
- ▸ Wear the requisite protective equipment.

**i Note**

Additional information can be found at www.balluff.com on the product page.

### 5.2.1 Faults

In the event of any faults, first check whether the pressure switch is mounted correctly, mechanically and electrically.

Table 1: Faults and corrective measures

| Fault | Possible cause | Measure |
|---|---|---|
| **No output signal** | Cable break | Check the continuity |
| **No output signal** | No / wrong supply voltage | Rectify the supply voltage |
| **No / wrong output signal** | Wiring error or wrong switching logic / analogue signal | Observe the pin assignment; check the output configuration |
| **Constant output signal upon change in pressure** | Mechanical overload caused by overpressure | Replace instrument; if it fails repeatedly, contact the manufacturer |
| **Deviating zero point signal** | Overpressure limit exceeded | Maintain permissible overpressure limit |
| **Signal span too small** | Mechanical overload caused by overpressure | Replace instrument; if it fails repeatedly, contact the manufacturer |
| **Signal span too small** | Supply voltage too high / low | Rectify the supply voltage |
| **Signal span drops** | Moisture has entered | Mount the cable correctly |
| **Signal span drops / too small** | Diaphragm damaged (impacts, abrasive/aggressive medium, corrosion at diaphragm/process connection) | Contact manufacturer and replace instrument |

### 5.2.2 Warning and errors

Via the digital display, the instrument's internal warnings and errors are output. The instrument continues to measure, even when a warning exists. The output signal and the switching outputs are still output. EN The following tablen shows the codes and their meaning.

Table 2: Warnings

| Warning | Description |
|---|---|
| **ATT1** | On changing the switch point, the reset point of the instrument is automatically reduced to the smallest hysteresis of 0.25 %. |
| **ATT2** | Adjustability of zero point: current pressure is outside the limits. |
| **ATT3** | Password entered for menu access is incorrect. |
| **ATT4** | Unit cannot be displayed on digital display; previous unit is used. |
| **ATT5** | Maximum turndown exceeded. |
| **ILOC** | Menu locked over IO-Link. |
| **OL** | Overpressure: measuring range exceeded > approx. 3.125 % (digital display flashing). |
| **PAS** | Prompt for password input. |
| **UL** | Vacuum: below measuring range < approx. 3.125 % (digital display flashing). |

Table 3: Errors

| Error | Description |
|---|---|
| **ERR** | Internal error (restarting the instrument or resetting to factory settings may help). The analogue output signals the alarm: ≤ 3.6 mA (4 … 20 mA) or ≥ 11 V (0 … 10 V) in accordance with NAMUR43. The switching outputs retain their current state (open or closed). |
| **ERR1** | Instrument temperature exceeded / too low, or supply voltage too low. Analogue output remains active but accuracy and maximum analogue value may be restricted (temperature influence or low supply voltage). The switching outputs retain their current state (open or closed). |
| **ERR2** | Sensor defect detected, check whether high overpressure is present (can be detected as sensor defect), if necessary, restart instrument or exchange of instrument is needed. The analogue output controls the alarm signal ≤ 3.6 mA (4 … 20 mA output signal) or ≥ 11 V (0 … 10 V output signal) in accordance with NAMUR43 The switching outputs keep the current switching state (output open or closed) |
| **SC** | Short-circuit detected at switching output 1 or 2 The switching output affected is inactive so long as the short-circuit is present |

# 6 IO-Link interface reference

This section provides information about the IO-Link interface reference.

## 6.1 Primary device functions

This section describes the primary device functions of the sensor.

### 6.1.1 Description of the IO-Link functionality

IO-Link is a point-to-point connection for the communication of the BFP-3SD with an IO-Link master.

#### Physical layer

The BFP-3SD supports the following features:

Table 1: IO-Link features

| Property | Value |
|---|---|
| IO-Link specification | Version 1.1.5 |
| SIO mode | Yes |
| Minimum cycle time | 2.3 ms |
| Transmission rate | COM2 (38.4 kBaud) |
| Process data length | 16 bit (Frame type 2.2) |
| Data storage support | Yes |
| Smart Sensor Profile | Yes |

#### Process Data

The BFP-3SD has 1 or 2 digital outputs and is optionally available with an 4 … 20 mA or 0 … 10 V analogue output signal. Both physical switching outputs are also transmitted as process data via IO-Link

In the 'SIO Mode' (Standard I/O Mode, without IO-Link operation) the switching output 1 will switch on pin 4 of the M12x1 connector. In the IO-Link communication mode, this pin 4 is reserved exclusively for communication.

With a Frametype 2.2, the 16-bit process data from the pressure switch is transmitted cyclically. Bit 0 is the state of switching output 1 and Bit 1 is the state of switching output 2, where 1 respectively DC 24 V correspond to the "closed" logic state of the respective output.

The remaining 14 Bit contain the analogue value measured by the pressure switch. According to the measuring range of the sensor and the unit configured, the 14 Bit process data of the measured value, is dynamically adjusted. Multiplying the process data with the gradient (Index #67) allows for a pressure reading in the selected unit.

Table 2: Process data bit allocation

| Bit | Process value | Value range |
|---|---|---|
| 0 | OU1 | 0 = inactive<br>1 = active |
| 1 | OU2 | 0 = inactive<br>1 = active |
| 2–15 | ProcessData | -8192 … 8191 |

**Example:** Measuring range of the sensor = 0 … 10 psi ProcessData range = 0…1,000 with Gradient = 0.01 In this example: ProcessData 500 = 5.0 psi

Changing the unit, will result in new ProcessData range and Gradient.

### Service data (ISDU – Indexed Service Data Unit)

Service data is always acyclic and exchanged on the request of the IO-Link Master. With the help of the service data, the following parameter values or instrument status can be read:

| Index | Name | Format | Length | Access | Default Value | Value/Range |
|---|---|---|---|---|---|---|
| 16 (0x10) | Vendor Name | StringT | max. 64 octets | R | Balluff GmbH | |
| 17 (0x11) | Vendor Text | StringT | max. 64 octets | R | www.balluff.com | |
| 18 (0x12) | Product Name | StringT | max. 64 octets | R | BFP 3SD | |
| 19 (0x13) | Product ID[1] | StringT | max. 64 octets | R | | |
| 20 (0x14) | Product Text[2] | StringT | max. 64 octets | R | | |
| 21 (0x15) | Serial Number[3] | StringT | max. 16 octets | R | S# | |
| 22 (0x16) | Hardware Revision | StringT | max. 64 octets | R | | |
| 23 (0x17) | Firmware Revision | StringT | max. 64 octets | R | | |
| 24 (0x18) | Application Specific Tag[4] | StringT | max. 32 octets | R/W | | |
| 25 (0x19) | Function Tag | StringT | max. 32 octets | R/W | | |
| 26 (0x1A) | Location Tag | StringT | max. 32 octets | R/W | | |
| 32 (0x20) | Error Count[5] | UIntegerT | 2 octets | R | | |
| 36 (0x24) | Device status | UIntegerT | 1 octet | R | | 0 = Device is OK<br>1 = Maintenance required<br>2 = Out of specification<br>3 = Functional check<br>4 = Failure |
| 37 (0x25) | Detailed Device Status[6] | ArrayT of OctetStringT3 | 24 octets | R | 00 00 00 h | |

## Output signal settings

1 Similar to DeviceID
2 Additional product information.
3 Corresponds to serial number on the product label (S#...).
4 Customer-specific measuring point name, Allowed Characters: “A...Z”; “0...9”; “-“;
5 Counts errors since power-on or reset.
6 Error storage

Table 3: Parameter (ISDU) index table

| Index (dec / hex) | Name | Format | Length | Access | Default value | Value / Range | Remarks |
|---|---|---|---|---|---|---|---|
| 64 (0x40) | Order Number | StringT | max. 16 octets | R | | | Corresponds to article number on the product label (P#...). |
| 66 (0x42) | Unit Process Data | UIntegerT | 1 octet | R/W | Order-related | 0 = bar<br>1 = mbar<br>2 = MPa<br>3 = kPa<br>4 = PSI<br>5 = kg/cm²<br>6 = % | Selection of unit for ProcessData and all related parameters (switch point settings, analogue output scaling, etc.) |
| 67 (0x43) | Gradient | Float32T | 4 octets | R | Order-related | | Factor for calculation: ProcessData × Gradient = actual pressure in set unit (e.g. ProcessData 0...1000 with gradient 0.01 for 0...10 psi) |
| 68 (0x44) | Start of Measuring Range | IntegerT | 2 octets | R | Order-related | | Start of measuring range in set ProcessData unit |
| 69 (0x45) | End of Measuring Range | IntegerT | 2 octets | R | Order-related | | End of measuring range in set ProcessData unit |
| 70 (0x46) | OU1 | UIntegerT | 1 octet | R/W | HNO | 0 = HNO<br>1 = HNC<br>2 = FNO<br>3 = FNC | Switching function – switching output 1 |
| 71 (0x47) | DS1 | UIntegerT | 2 octets | R/W | 0 | 0...65000 | Switch delay time switching output 1 [ms] |
| 72 (0x48) | DR1 | UIntegerT | 2 octets | R/W | 0 | 0...65000 | Reset delay time switching output 1 [ms] |
| 73 (0x49) | Damping OU1 | UIntegerT | 2 octets | R/W | 0 | 0...65000 | Damping for switching signal 1 (99%)<br>0 = no damping active |

continues on next page

Table 3 – continued from previous page

| Index (dec / hex) | Name | Format | Length | Access | Default value | Value / Range | Remarks |
|---|---|---|---|---|---|---|---|
| 74 (0x4A) | Polarity OU1 | UIntegerT | 2 octets | R/W | PNP | 0 = PNP<br>1 = NPN | Output Logic for switching output 1 |
| 80 (0x50) | OU2 | UIntegerT | 1 octet | R/W | HNO | 0 = HNO<br>1 = HNC<br>2 = FNO<br>3 = FNC | Switching function – switching output 2 (only for devices with 2 outputs) |
| 81 (0x51) | DS2 | UIntegerT | 2 octets | R/W | 0 | 0…65000 | Switch delay time switching output 2 [ms] |
| 82 (0x52) | DR2 | UIntegerT | 2 octets | R/W | 0 | 0…65000 | Reset delay time switching output 2 [ms] |
| 83 (0x53) | Damping OU2 | UIntegerT | 2 octets | R/W | 0 | 0…65000 | Damping for switching signal 2 (99%). 0 = no damping active |
| 84 (0x54) | Polarity OU2 | UIntegerT | 2 octets | R/W | PNP | 0 = PNP<br>1 = NPN | Output Logic for switching output 2 |
| 90 (0x5A) | OU3 Analogue Output Mode | UIntegerT | 1 octet | R/W | 4 … 20mA | 0 = I / 4 … 20 mA<br>1 = U / 0 … 10V | Signal setting of the analogue output. Only available for devices with analogue output 4 … 20 mA / 0 … 10 V. |
| 91 (0x5B) | Analogue Output Damping | UIntegerT | 2 octets | R/W | 0 | 0…65000 | Damping for the analogue output signal 2 (τ = 99%) [ms].<br>0 = no damping active |

### Output signal settings based on selected unit

Index 66 (0x42) “Unit ProcessData” defines which configurable parameters are shown in the IO-Link tool and which parameter is prioritized.

(e.g. Index 66 is set to “bar” -> Index 140-145 is shown and can be configured, any configuration in e.g. Index 200-205 in “psi” will be ignored.)

Table 4: Switching point parameters (ISDU) index table

| Index (dec / hex) | Name | Format | Length | Access | Default value | Value / Range | Remarks |
|---|---|---|---|---|---|---|---|
| 140 (0x8C) | Analog Output Start Value_bar | IntegerT | 2 octets | R/W | Start of measuring range | Start … end of measuring range | Defines the pressure value for start of analogue output signal (e.g. 10 bar = 4 mA). Only available for devices with analogue output. |
| 141 (0x8D) | Analog Output End Value_bar | IntegerT | 2 octets | R/W | End of measuring range | Start … end of measuring range | Defines the pressure value for start of analogue output signal (e.g. 78 bar = 20 mA). Only available for devices with analogue output. |
| 142 (0x8E) | SP1 / FH1_bar | IntegerT | 2 octets | R/W | End of measuring range (Start of meas. range + 0.25 %) | (Start of meas. range + 0.25 %) … end of meas. range | Switching point (or window high) value.The value must always be higher than the reset point (or window low). The minimum gap between these two points has a value of 0,25% of pressure range. If the Gap is lower than the minimum hysteresis, the associate reset point will automatically be changed to observe the limits. |
| 143 (0x8F) | RP1 / FL1_bar | IntegerT | 2 octets | R/W | End of measuring range - 10% of range | Start of meas. range … (end of meas. range - 0.25 %) | Reset point (or window low) value.The value must always be lower than the switch point (or window high). The minimum gap between these two points has a value of 0,25% of pressure range. If the Gap is lower than the minimum hysteresis, the associate switching point will automatically be changed to observe the limits. |

continues on next page

Table 4 – continued from previous page

| Index (dec / hex) | Name | Format | Length | Access | Default value | Value / Range | Remarks |
|---|---|---|---|---|---|---|---|
| 144 (0x90) | SP2 / FH2_bar | IntegerT | 2 octets | R/W | End of measuring range (Start of meas. range + 0.25 %) | (Start of meas. range + 0.25 %) … end of meas. range | See SP1 / FH1; only available for devices with 2 switching outputs. |
| 145 (0x91) | RP2 / FL2_bar | IntegerT | 2 octets | R/W | End of measuring range - 10% of range | Start of meas. range … (end of meas. range - 0.25 %) | See RP1 / FL1; only available for devices with 2 switching outputs. |
| 155–160 (0x9B–0xA0) | Index 140 … 145 in Unit “mbar” | IntegerT | 2 octets | R/W | See 140 … 145 | See 140 … 145 | Index 140 … 145 expressed in unit “mbar” |
| 170–175 (0xAA–0xAF) | Index 140 … 145 in Unit “MPa” | IntegerT | 2 octets | R/W | See 140 … 145 | See 140 … 145 | Index 140 … 145 expressed in unit “MPa” |
| 185–190 (0xB9–0xBE) | Index 140 … 145 in Unit “kPa” | IntegerT | 2 octets | R/W | See 140 … 145 | See 140 … 145 | Index 140 … 145 expressed in unit “kPa” |
| 200–205 (0xC8–0xCD) | Index 140 … 145 in Unit “PSI” | IntegerT | 2 octets | R/W | See 140 … 145 | See 140 … 145 | Index 140 … 145 expressed in unit “PSI” |
| 215 to 220(0xD7 to 0xDC) | Index 140 … 145 in Unit “kg_cm²” | IntegerT | 2 octets | R/W | See 140 … 145 | See 140 … 145 | Index 140 … 145 in Unit “kg_cm²” |
| 230 to 235 (0xE6 to 0xEB) | Index 140 … 145 in Unit “%” | IntegerT | 2 octets | R/W | See 140 … 145 | See 140 … 145 | Index 140 … 145 in Unit “%” |

### Local display settings

Table 5: Local display settings

| Index (dec / hex) | Name | Format | Length | Access | Default value | Value / Range |
|---|---|---|---|---|---|---|
| 100 (0x64) | Display Unit[7] | UIntegerT | 1 octet | R/W | Order-related | 0 = bar<br>1 = mbar<br>2 = MPa<br>3 = kPa<br>4 = PSI<br>5 = kg/cm²<br>6 = % |
| 101 (0x65) | Display Rotation[8] | BooleanT | 1 octet | R/W | Standard | 0 = Standard<br>1 = 180° rotated |
| 102 (0x66) | Display Mode[9] | UIntegerT | 1 octet | R/W | Actual Pressure | 0 = Actual Pressure<br>1 = Highest Pressure<br>2 = Lowest Pressure<br>3 = Off<br>4 = SP1 / FH1<br>5 = RP1 / FL1<br>6 = SP2 / FH2<br>7 = RP2 / FL2 |
| 103 (0x67) | Display Password[10] | StringT | 4 octets | R/W | 0000 | 0000…9999 |
| 104 (0x68) | Display Damping[11] | UIntegerT | 2 octets | R/W | 200 | 0…65000 |
| 105 (0x69) | Display Update | UIntegerT | 1 octet | R/W | 5 Hz | 0 = 1Hz<br>1 = 2Hz<br>2 = 5Hz<br>3 = 10Hz |
| 106 (0x6A) | Locate me[12] | BooleanT | 1 octet | R/W | Off | 0 = Off<br>1 = On |
| 107 (0x6B) | Display Resolution | UIntegerT | 1 octet | R/W | OPT | 0 = OPT (Optimized)<br>1 = FULL (Maximum) |

## Diagnosis

Table 6: Diagnosis parameters (ISDU)

| Index (dec / hex) | Name | Format | Length | Access | Value / Range | Remarks |
|---|---|---|---|---|---|---|
| 110 (0x6E) | Temperature Unit Default value: °C | UIntegerT | 1 octet | R/W | 0 = °C 1 = °F | Unit of the internal temperature measurement. |
| 111 (0x6F) | Actual Temperature | Float32T | 4 octets | R | | Internal temperature measurement of the electronic components. |
| 112 (0x70) | Temperature Low | Float32T | 4 octets | R | | Displays the minimum temperature value in unit of temperature since first installation / since “reset low temperature”. |
| 113 (0x71) | Temperature High | Float32T | 4 octets | R | | Displays the maximum temperature value in unit of temperature since first installation / since “reset high temperature”. |
| 114 (0x72) | Temperature Low since Power Up | Float32T | 4 octets | R | | Displays the minimum temperature value in unit of temperature since last power-up. |
| 115 (0x73) | Temperature High since Power Up | Float32T | 4 octets | R | | Displays the maximum temperature value in unit of temperature since last power-up. |
| 120 (0x78) | Pressure Overload Counter | UIntegerT | 4 octets | R | | Duration in pressure overload range (Display = “OL”) [s]. |
| 121 (0x79) | Operating Hours Total | UIntegerT | 4 octets | R | | Displays the total amount of operating hours since first installation. [h] |

continues on next page

7 Unit of the pressure reading on the display. Depending on the Measuring Range, it may be that some units are not available.
8 Turns display indicator by 180°
9 Value shown in local display mode.“5” and “6” only available for devices with 2 switching outputs.
10 Sets the password for local parametrization via display and buttons.”0000” = No Password
11 Damping for the Display (τ = 99%) [ms]. 0 = no damping active
12 Helps to locate the device on a machine, flashes the switching output LEDs and displays “****” on the display. - “Locate Me” has the highest priority, e.g. an error OL would have less priority- The flashing can only be disabled by setting the parameter to “off”- The buttons on the device will be disabled

Table 6 – continued from previous page

| Index (dec / hex) | Name | Format | Length | Access | Value / Range | Remarks |
|---|---|---|---|---|---|---|
| 122 (0x7A) | Operating Hours since Power Up | UIntegerT | 4 octets | R | | Displays the total amount of operating hours since power-up. [h] |
| 123 (0x7B) | Sensor Status | UIntegerT | 1 octet | R | Bit0=Sensor defect<br>Bit1=Overpressure<br>Bit2=Underpressure<br><br>Bit3=Overtemperature<br><br>Bit4=Undertemperature<br>0 = no error/warning<br>1 = error/warning | Status of sensor self-diagnosis. |
| 124 (0x7C) | Low Pressure | IntegerT | 2 octets | R | | Displays the minimum pressure value in set unit of ProcessData since first installation / since reset with “Reset Low Pressure” |
| 125 (0x7D) | High Pressure | IntegerT | 2 octets | R | | Displays the maximum pressure value in set unit of ProcessData since first installation / since reset with “Reset High Pressure” |
| 126 (0x7E) | Low Pressure since Power Up | IntegerT | 2 octets | R | | Displays the minimum pressure value in set unit of ProcessData since last power-up. |
| 127 (0x7F) | High Pressure since Power Up | IntegerT | 2 octets | R | | Displays the maximum pressure value in set unit of ProcessData since last power-up |

### System commands

Table 7: System commands (ISDU)

| Index (dec / hex) | Name | Format | Lengt | Access | Default value | Value / Range | Remarks |
|---|---|---|---|---|---|---|---|
| 2 (0x02) | Device Reset | UIntegerT | 1 octet | W | | 128 (0x80) | Restarts the device without changing parameters. |
| 2 (0x02) | Application Reset | UIntegerT | 1 octet | W | | 129 (0x81) | Technology-specific parameters are reset to their default values; identification parameters are retained; data is uploaded, if enabled. |
| 2 (0x02) | Restore Factory Settings | UIntegerT | 1 octet | W | | 130 (0x82) | Restores the device to factory settings. |
| 2 (0x02) | Back-to-box | UIntegerT | 1 octet | W | | 131 (0x83) | Restore factory settings and disable communication until the system restarts. |
| 2 (0x02) | Reset High Pressure | UIntegerT | 1 octet | W | | 160 (0xA0) | Resets the high pressure counter. |
| 2 (0x02) | Reset Low Pressure | UIntegerT | 1 octet | W | | 161 (0xA1) | Resets the low pressure counter. |
| 2 (0x02) | Reset Pressure Overload Counter | UIntegerT | 1 octet | W | | 162 (0xA2) | Clears the overload counter to zero. |
| 2 (0x02) | Reset High Temperature | UIntegerT | 1 octet | W | | 163 (0xA3) | Resets the high temperature counter. |
| 2 (0x02) | Reset Low Temperature | UIntegerT | 1 octet | W | | 164 (0xA4) | Resets the low temperature counter. |
| 2 (0x02) | Adjust Zero Point | UIntegerT | 1 octet | W | | 165 (0xA5) | Performs an “Autozero”. |

## 6.2 System functions

This section describes the system functions of the sensor.

### 6.2.1 Device Access Locks

#### Description

With *Device Access Locks*, the device can be locked for certain types of configuration access to prevent changes to the parameters.

This functionality is defined in the IO-Link standard and is implemented according to Version 1.1.

### ISDU

| Index | Name | Format | Length | Access | Default value |
|---|---|---|---|---|---|
| 12 (0x0C) | Device Access Locks | RecordT | 2 octets | R/W | 00 00h (unlocked) |

| **Value/Range** | **Remarks** |
|---|---|
| Bit 0: Parameter (write) access | Disables change of parameters via IO-Link |
| Bit 1: Data Storage | Bit 1: Disables data storage mechanism |
| Bit 2: Local Parametrizatio | Bit 2: Disable change of parameters via buttons on the device |
| Bit 3: Local User Interface | Bit 3: Disable access on the menu via buttons on the device |
| 0 = Unlocked, 1 = Locked | |

# 7 Installation and connection

## 7.1 Installation

### 7.1.1 Mechanical mounting

Only use the pressure switch if it is in perfect condition with respect to safety. Prior to commissioning, the pressure switch must be subjected to a visual inspection.

- Leaking liquid is indicative of damage.
- Obvious damage must be reported immediately.
- With a high ambient temperature and a high UV irradiation, the pressure switch must be installed with additional covering in order to avoid damage to the digital indicator and buttons.

## 7.2 Electrical connection

**Pin assignment**

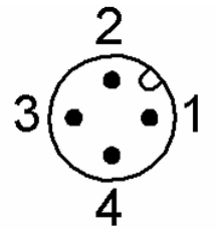


Fig. 1: M12 plug pin assignment (view on pin side)

Table 1: M12 plug pin assignment

| Pin | Signal | Description |
|---|---|---|
| 1 | U+ | Positive power supply |
| 2 | SP2/S+ | Switching output 2/Analog output |
| 3 | U- | Negative power supply |
| 4 | SP1/C | Switching outout 1/Communication with IO-Link |

**Note**

For pin assignments, see also product label

**For instruments without North American certification**

This equipment is intended for operation with low voltages which are separated from the AC 230 V (50 Hz) mains voltage or voltages greater than AC 50 V or DC 120 V for dry environments. A connection to an SELV circuit is recommended, or alternatively to circuits with a different protective measure in accordance with IEC 60364-4-41 installation standard.

**For instruments with North American certification per UL/CSA IEC 61010-1**

The power supply for the pressure sensor must be made via an energy-limited electric circuit in accordance with section 9.3 of UL/EN/IEC 61010-1 or an LPS per UL/EN/IEC 62368-1 or class 2 in accordance with UL1310/UL1585 (NEC or CEC). The voltage supply must be suitable for operation above 2,000 m should the pressure switch be used at this altitude.

## 7.3 Shielding and cable routing

Include the pressure switch in the equipotential bonding via the process connection or connect it to ground (earth).

# 8 Commissioning

Only use original parts and accessories.

## 8.1 Before you begin

To operate the device in a cybersecure environment, take the following measures before commissioning:

- Change default user and add a strong password. Secure the password in a safe location.
- Check if the device is running the latest firmware version. If not, update the firmware to the latest version that fits your needs.
- Set the brute force protection configuration to values that fit your needs.
- Replace the default self-signed certificate with a root certificate that is trusted by your organization. Secure the private key in a safe location.

## 8.2 Post-commissioning measures

In order to maintain a secure environment, take the following measures after commissioning:

- Create a backup of the device configuration and store it in a secure location.

## 8.3 Adjustability of zero point

Check the indicated zero point on the digital display during commissioning. Should a zero point offset be displayed as a result of installation, this can be reset in programming mode with the 0SET parameter. Only carry out the setting for gauge and vacuum pressure measuring ranges in a depressurised state.

**Note**

For absolute pressure measuring ranges, the setting must be carried out at 0 bar absolute (vacuum). Since appropriate references are required for this, we recommend that this is only carried out by the manufacturer.

# 9 Operation and maintenance

## 9.1 Startup

**DANGER**

Uncontrolled system movement When starting up, if the sensor is part of a closed loop system whose parameters have not yet been set, the system may perform uncontrolled movements. This could result in personal injury and equipment damage.
Please mind the following safety instructions:

- Persons must keep away from the system's hazardous zones.
- Startup must be performed only by trained technical personnel.
- Observe the safety instructions of the equipment or system manufacturer.

To start up the system, proceed as follows:

1. Check connections for tightness and correct polarity.
2. Replace damaged connections.
3. Turn on the system.
4. Check measured values and adjustable parameters

## 9.2 Operation

Table 1: Operation modes

| Mode | Description |
|---|---|
| System start | Digital display is fully activated for 1 s.<br>When the pressure switch powers up within the hysteresis range, the output switch is set to "not active" by default. |
| Programming mode (setting the parameters) | **Activating the programming mode**<br>Keep the "MENU" button pressed for approx. 2 s. If a password ≠ 0000 is set, a password is requested; on successful authentication the instrument enters programming mode, otherwise it reverts to display mode.<br>**Timeout**<br>If no button is pressed for 60 s while setting a parameter, the instrument returns to display mode and the value remains unchanged. |
| Display mode (normal operation, display of pressure value) | **Returning to display mode**<br>Simultaneous pressing of "INFO" and "MENU". |

## 9.3 Overview of parameters

Table 2: Overview of parameters

| Menu item | Description | Parameter | Factory setting |
|---|---|---|---|
| **SP1 / SP2** | Hysteresis function: Switch point (switching output 1/2) | 0.25 … 100 % of measuring range | Nominal pressure |
| **FH1 / FH2** | Window function: Window high (switching output 1/2) | 0.25 … 100 % of measuring range | Nominal pressure |
| **RP1 / RP2** | Hysteresis function: Reset point (switching output 1/2) | 0 … (switch point - 0.25 % of measuring range) | Nominal pressure - 10 % |
| **FL1 / FL2** | Window function: Window low (switching output 1/2) | 0 … (window high - 0.25 % of measuring range) | Nominal pressure - 10 % |
| **EF** | Extended programming functions | | |
| **RES** | Return the set parameters to the factory settings | Yes / No | |
| **DS1 / DS2** | Switching delay time before any electrical signal change occurs (for SP1, SP2) | 0.00 … 65.00 s | 0.00 s |
| **DR1 / DR2** | Reset delay time before any electrical signal change occurs (for RP1, RP2) | 0.00 … 65.00 s | 0.00 s |
| **OU1 / OU2** | Switching function (switching output 1/2) | HNO / HNC / FNO / FNC | HNO |
| **OU3** | Output signal (analogue) | I = 4 … 20 mA<br>U = DC 0 … 10 V | I |
| **POL1 / POL2** | Switching logic (switching output 1/2) | PNP / NPN | PNP |
| **ALOW** | Measuring range scaling / turndown (analogue start value) | corresponding to analogue output | Start of measuring range |
| **AHGH** | Measuring range scaling / turndown (analogue end value) | corresponding to analogue output | End of measuring range |
| **AVGD** | Damping (digital display) | 0.00 … 65.00 s | 0.20 s |
| **AVG1 / AVG2** | Damping (switching output 1/2) | 0.00 … 65.00 s | 0.00 s |
| **AVG3** | Damping (analogue signal) | 0.00 … 65.00 s | 0.00 s |
| **UNIT** | Unit switching | BAR, mBAR, MPa, kPa, PSI, kg/cm², % | Order-related |
| **0SET** | Adjustability of the zero point / execution of “Autozero” (max. ±3 % of span) | Yes / No | |
| **DISM** | Display value in display mode | ACT = current system pressure<br>LOW/HIGH = min/max system pressure<br>OFF = display off<br>SP1/FH1 / RP1/FL1 / SP2/FH2 / RP2/FL2 = set switching value | ACT |
| **DISU** | Refresh rate (digital display) | 1, 2, 5, 10 updates/second | 5 |

continues on next page

Table 2 – continued from previous page

| Menu item | Description | Parameter | Factory setting |
|---|---|---|---|
| **DISR** | Rotate the indication by 180° (digital display) | Yes / No | |
| **DRES** | Resolution (digital display) | OPT = optimised (stable display with rounding)<br>FULL = maximum (finest resolution; may require damping) | OPT |
| **RHL** | Clear memory (min/max system pressure) | Yes / No | |
| **PAS** | Password entry | 0000 = no password; password input digit by digit | 0000 |
| **TAG** | Measuring instrument name (TAG) | Up to 32 characters (A–Z; 0–9; -; SPACE). Two consecutive spaces terminate input and remove trailing characters. | Without |

## 9.4 Menu tree

Certain menu items (light grey) are only displayed if the pressure switch features the respective option

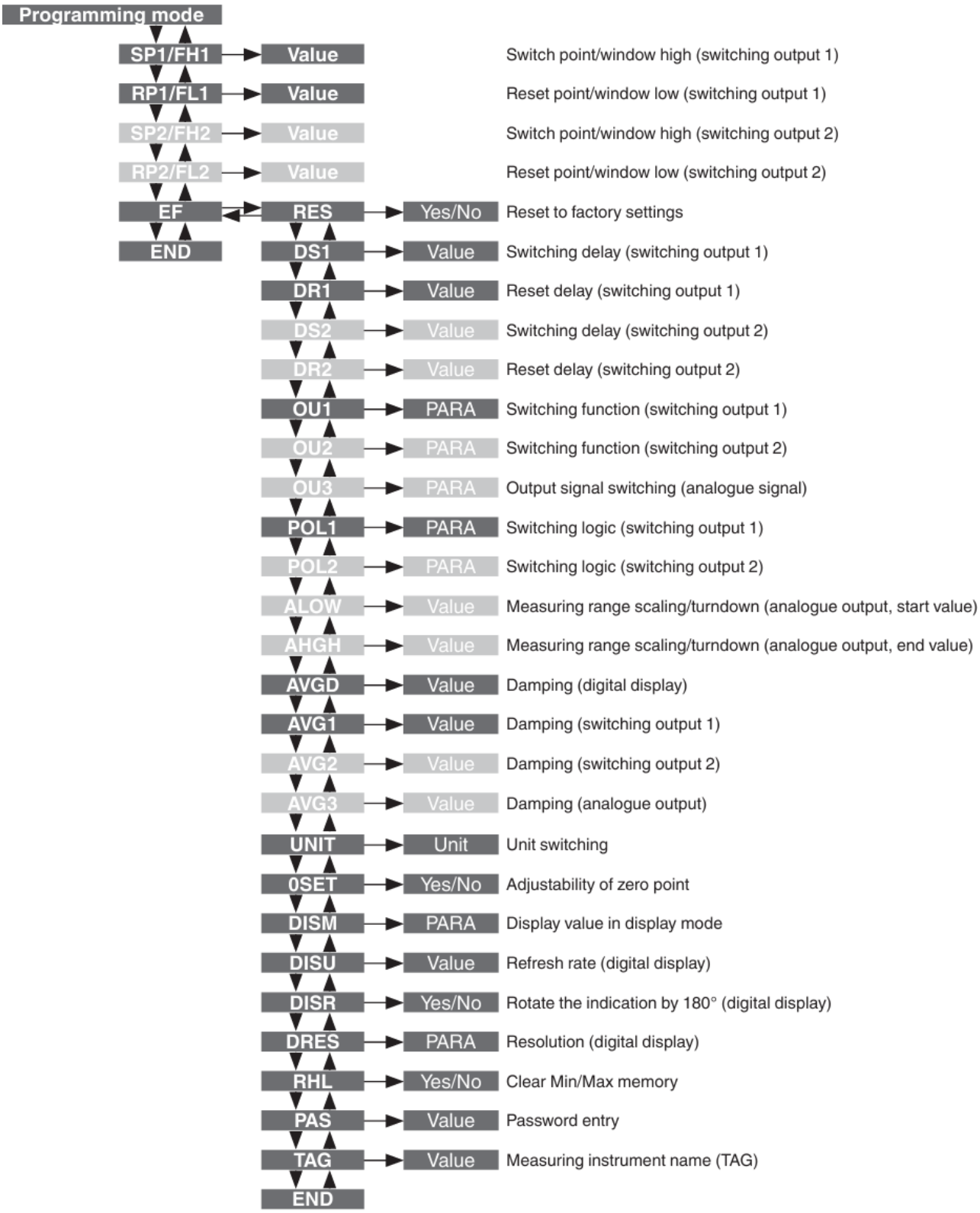
Programming mode
SP1/FH1
Value
Switch point/window high (switching output 1)
RP1/FL1
Value
Reset point/window low (switching output 1)
SP2/FH2
Value
Switch point/window high (switching output 2)
RP2/FL2
Value
Reset point/window low (switching output 2)
EF
RES
Yes/No
Reset to factory settings
END
DS1
Value
Switching delay (switching output 1)
DR1
Value
Reset delay (switching output 1)
DS2
Value
Switching delay (switching output 2)
DR2
Value
Reset delay (switching output 2)
OU1
PARA
Switching function (switching output 1)
OU2
PARA
Switching function (switching output 2)
OU3
PARA
Output signal switching (analogue signal)
POL1
PARA
Switching logic (switching output 1)
POL2
PARA
Switching logic (switching output 2)
ALOW
Value
Measuring range scaling/turndown (analogue output, start value)
AHGH
Value
Measuring range scaling/turndown (analogue output, end value)
AVGD
Value
Damping (digital display)
AVG1
Value
Damping (switching output 1)
AVG2
Value
Damping (switching output 2)
AVG3
Value
Damping (analogue output)
UNIT
Unit
Unit switching
0SET
Yes/No
Adjustability of zero point
DISM
PARA
Display value in display mode
DISU
Value
Refresh rate (digital display)
DISR
Yes/No
Rotate the indication by 180° (digital display)
DRES
PARA
Resolution (digital display)
RHL
Yes/No
Clear Min/Max memory
PAS
Value
Password entry
TAG
Value
Measuring instrument name (TAG)
END

## 9.5 Operating notes

- Regularly check function of the sensor and all associated components.
- Regularly check for available firmware and security updates.
- Regularly review user accounts, access permissions and security-related settings.
- Take the sensor out of operation whenever there is a malfunction.
- Secure the system against unauthorized use.
- Check fasteners and retighten if needed.

## 9.6 Cleaning

Only use commercially available and solvent-free cleaning agents.

Before cleaning, correctly disconnect the instrument from the pressure supply, switch it off and disconnect it from the mains, if needed.

Do not use sharp objects or aggressive detergents to clean in order to avoid damage to the sensitive and extremely thin diaphragm and to the wetted surface of the instrument (when disassembled for calibration etc.) Clean the outside of the instrument with a moist cloth or if cleaning from outside (“wash down”) permitted, observe the permissible temperature and ingress protection.

Electrical connections, if available, must not come into contact with moisture.

Wash or clean the dismounted instrument before returning it, in order to protect personnel and the environment from exposure to residual media. Residual media in dismounted instruments can result into a risk to persons, the environment and equipment. Sufficient precautionary measures must be taken.

## 9.7 Maintenance

The product is maintenance-free.

# 10 Decomissioning

**Note**

**Exposure of sensitive data**
If the device is not decommissioned properly, sensitive data may be exposed. This can lead to unauthorized access to the device and its data.
- Reset the device to factory settings to remove any remaining data and configurations.

## 10.1 Dismounting

1. Depressurise and de-energise the pressure sensor.
2. Disconnect the electrical connection.
3. Unscrew the pressure sensor with a spanner using the spanner flats.

**WARNING**

**Physical injuries and damage to property and the environment caused by hazardous media**
Upon contact with hazardous media (e.g. oxygen), there is a danger of physical injuries and damage to property and the environment.
- ► Should a failure occur, media with extremely high temperature and under high pressure or vacuum may be present at the instrument.
- ► Wear the requisite protective equipment.

**WARNING**

**Risk of burns**
During dismounting there is a risk of dangerously hot media escaping. The pressure sensor may have heated up severely due to hot media.
- ► Let the instrument cool down sufficiently before dismounting it.
- ► Wear the requisite protective equipment.

## 10.2 Return

**WARNING**

Physical injuries and damage to property and the environment through residual media Residual media in the dismounted instrument can result in a risk to persons, the environment and equipment.
- With hazardous substances, include the material safety data sheet for the corresponding medium.
- Clean the instrument, see chapter cleaning.

**Strictly observe the following when shipping the instrument:**

All instruments delivered to Balluff must be free from any kind of hazardous substances (acids, bases, solutions, etc.) and must therefore be cleaned before being returned.

When returning the instrument, use the original packaging or a suitable transport packaging.

## 10.3 Disposal

Incorrect disposal can put the environment at risk. Dispose of instrument components and packaging materials in an environmentally compatible way and in accordance with the country-specific waste disposal regulations.



Do not dispose of with household waste. Ensure a proper disposal in accordance with national regulations.

**Note**

Additional information can be found at www.balluff.com on the product page.

# Headquarters and Technical Service Hubs

www.balluff.com/go/contact

Balluff GmbH
Zabergäustraße 8
73765 Neuhausen a.d.F.
Germany

Document version: *2026-11-20 - 19dc0f959a305f801d2dbd34b1adcc62313eb796*