BALLUFF

BRS S-G12O05-0105-AJ6-000S04

BRS0005



english

Contents

1 About this guide **1**
1.1 Validity . . . 1
1.2 Explanation of the warnings . . . 1
1.3 Symbols and conventions . . . 2

2 Safety notes **3**
2.1 Intended use . . . 3
2.2 General safety notes . . . 3
2.3 Personnel qualification . . . 4
2.4 Cybersecurity . . . 4

3 Scope of delivery, transport and storage **6**
3.1 Scope of delivery . . . 6
3.2 Unpacking . . . 6
3.3 Transport . . . 6
3.4 Storage conditions . . . 6

4 Product Information **8**
4.1 Product description . . . 8
4.2 Technical data . . . 11
4.3 Accessories . . . 13

5 Interfaces and communication **14**
5.1 Error indications and signals . . . 14

6 Installation and connection **16**
6.1 Installation . . . 16
6.2 Electrical connection . . . 18
6.3 Shielding and cable routing . . . 19

7 Commissioning **20**
7.1 Adjustment . . . 20

8 Operation and maintenance **21**
8.1 Startup . . . 21
8.2 Operation . . . 21
8.3 Cleaning . . . 24
8.4 Maintenance . . . 24

9 Dismounting, return and disposal **25**
9.1 Dismounting . . . 25
9.2 Return . . . 25
9.3 Disposal . . . 26

10 Support **27**
10.1 Repair . . . 27

1 About this guide

1.1 Validity

This guide provides all the information required for the safe use of the BRS radar level sensor.

► Read this guide and the other applicable documents completely before installing and operating the product.

It applies to the following models:

- BRS S-G12O05-0105-AJ6-000S04

Note

This guide was created in English. Other language versions are translations of this guide.
© Copyright 2026, Balluff GmbH Zabergäustraße 8, 73765 Neuhausen auf den Fildern
All contents are protected by copyright. All rights reserved, including the rights of reproduction, distribution, processing and translation.

Other applicable documents

Additional information about this product can be found at www.balluff.com on the product page, e.g. in the following documents:
- Data sheet
- Declaration of Conformity
- Disposal

1.2 Explanation of the warnings

► Always observe the warnings in this guide and the measures described to avoid hazards.

The warnings used here contain various signal words and are structured as follows:

SIGNAL WORD

Type and source of the hazard
Consequences if not complied with
► Measures to avoid hazards

The individual signal words mean:

NOTICE

Identifies a danger that could **damage or destroy the product**.

⚠ CAUTION

The general warning symbol together with the signal word CAUTION indicates a hazard which can lead to **slight or moderate injuries**.

⚠ WARNING

The general warning symbol together with the signal word WARNING indicates a hazard which can lead to **death or serious injuries**.

DANGER

The general warning symbol in conjunction with the signal word DANGER identifies a hazard which, if not avoided, will certainly result in **death or serious injury**.

1.3 Symbols and conventions

- Individual instructions are indicated by a preceding triangle.

Action sequences are numbered consecutively:

1. Instruction 1
2. Instruction 2

Numbers unless otherwise indicated are decimals (e.g. 23). Hexadecimal numbers are represented with a preceding 0x (e.g. 0x12AB).

Buttons or selectable menu entries are described in italic and small caps, e.g.Save.

Menu commands are joined with a greater-than sign, e.g. “Settings>Options” stands for the menu command Options from the Settings menu.

Note

Note, tip
This symbol indicates general notes.

2 Safety notes

2.1 Intended use

The BRS G1/2" radar level sensor is used to determine the level of oil- and water-based media as well as solids. The range of use is defined by the technical performance limits and materials. The safe operation of the instrument is only ensured if the BRS G1/2" is used correctly in accordance with the operating instructions and any supplementary instructions.

i Note

Important Notes:
- The instrument may only be operated in approved countries (see information sheet on conformity and approval) and in accordance with national laws.
- Proper function is only guaranteed if the device is used in accordance with the manual, all relevant documents, and the technical specifications. Use only original Balluff accessories.
- This instrument is not permitted to be used in hazardous areas.
- The instrument has been designed and engineered solely for the intended use described here and may only be used accordingly.

It is assumed that the instrument is handled properly and within its technical specifications.

- ► Observe the technical specifications in these operating instructions, see chapter *Technical data*.
- ► If the instrument is not handled properly or operated within its technical specifications, take it out of service immediately and have it inspected by authorised Balluff service personnel.

The manufacturer shall not be liable for claims of any type based on operation contrary to the intended use.

Reasonably foreseeable misuse

Uses not listed in the description of intended use are prohibited. Such prohibited uses will void any warranty and liability claims against the manufacturer. Technical or electrical modifications to the product are also not permitted, except for updates.

Any use beyond or different to the intended use is considered as improper use.

- ► Refrain from unauthorised modifications to the instrument.

The device must not be used:

- in hazardous areas.
- in safety or emergency shutdown devices.
- with abrasive and viscous media.
- with medical devices.
- in applications with direct contact with foodstuffs.

2.2 General safety notes

Personnel qualification

Installation, commissioning, maintenance and decommissioning of the device may only be performed by qualified personnel authorised by the system owner. Qualified personnel are persons who, based on their technical training, experience and knowledge of applicable regulations and standards, are capable of carrying out the required work and recognizing potential hazards.

Installation and commissioning

- ► Have installation and commissioning of the device performed only by trained specialists.

- ► Use only the components and replacement parts approved by Balluff GmbH in the device data sheet and/or the device operating manual.

Balluff GmbH accepts no liability for damages resulting from improper use or unauthorized manipulation.

Planning the system

- ► Before you commission the device, please carefully read the device data sheet, the device operating manual and the technical documentation for the device (hereafter referred to as “documentation”), where it exists.

The respective, current documentation associated with the device is available from www.balluff.com.

- ► During installation and operation of the device, observe all safety aspects provided in the documentation.

Failure to comply in part or in whole may result in harm to life, the body or health and in property damage.

- ► Adhere to the specifications for the operating voltage according to the documentation.
- ► Observe the details provided in the documentation for the intended use of the device.
- ► Use the device only with an approved power supply.

Using the system

Incorrect voltages may lead to excessive heat and cause a fire. Incorrect connection of the device may cause machine malfunctions!

- ► Observe the voltages specified in the documentation.
- ► Make certain that power is switched off and that the device is grounded during installation and maintenance work.

Operation and testing The system owner and user are responsible for adhering to locally applicable safety regulations.

- ► In the event of device defects and malfunctions, take the device out of operation and safeguard it against unauthorized use.

Electromagnetic Radiation

When handled properly, this device poses no hazard at a distance of 20 cm or more. At a distance of less than 20 cm, heating of exposed body parts in the field (e.g., fingers) is possible.

- ► Balluff recommends that people with pacemakers and pregnant women do not stay in the immediate vicinity of the device.
- ► Do not operate the device near medical equipment or, without prior approval, near military installations, airports, or radio astronomy facilities.

2.3 Personnel qualification

i Note

The activities described in these operating instructions may only be carried out by skilled personnel who have the qualifications described below.

Skilled personnel, authorised by the operator, are understood to be personnel who, based on their technical training, knowledge of measurement and control technology and on their experience and knowledge of country-specific regulations, current standards and directives, are capable of carrying out the work described and independently recognising potential hazards.

⚠ WARNING

- ► Before mounting and commissioning the instrument, ensure you read the operating instructions.

2.4 Cybersecurity

To operate the product in a cyber secure environment and to ensure the integrity of data, the following measures must be taken:

- ► Check if the delivered product is an original and unmodified device delivered by Balluff GmbH. For more information, see Placeholder.
- ► Perform a risk analysis with regard to cyber security and, based on the identified risks, plan and implement appropriate security measures for a secure environment for the product.
- ► Only allow network access to the devices from outside to known and trusted devices and authorized users.
- ► Only allow authorized personnel physical access to devices from outside.
- ► Implement an information security management system (ISMS) to manage all information security measures.
- ► Implement a firewall to separate the machine/ plantnetwork from the network outside the plant/ machine (company network, Internet) in order to prevent incoming connections to the product's network interfaces in particular.

For further information, see:

- BSI IT-Grundschutz Kompendium
- BSI recommendations for OEMs and integrators
- CISA Best Practices for Industrial Control Systems
- NCSC: Secure connectivity principles for Operational Technology
- NIST SP 800-82 Guide to Industrial Control Systems

The device are intended for use at **Purdue Level 0 "Field Level / Sensors"**.

- ► Use a network secured according to the state of the art.

Note on Purdue Level 0: Purdue Level 0 refers to the lowest level of the Purdue reference architecture for industrial automation systems. This level includes the physical sensors and actuators directly connected to the production environment. Devices at this level are responsible for real-time data acquisition and processing.

- ► Allow access to the devices from outside only for known and trusted devices and authorized users.
- ► Protect the sensor and its interfaces against unauthorized physical access by appropriate measures, such as machine access control or physical barriers.

The sensor does not have a digital interface accessible to the user.

3 Scope of delivery, transport and storage

3.1 Scope of delivery

- Instrument
- Adjustment magnet
- Basic information

Other accessories are not included in the scope of delivery and must be ordered separately.

Note

Recommended accessories can be found at www.balluff.com on the product page.

3.2 Unpacking

To ensure that the delivered product is an original product of Balluff GmbH, check the following points when unpacking:

- ► The information on the nameplate of the device must match the information on, the delivery note.
- ► In case of any doubts of the integrity or authenticity of the product, please contact Balluff sevice.

3.3 Transport

Note

With improper transport, damage to property can occur.
- ► When unloading packed goods upon delivery as well as during internal transport, proceed carefully and observe the symbols on the packaging.
- ► With internal transport, observe the instructions in chapter *Storage conditions*.

- ► Check the product for any damage that may have been caused. In the event of any damage, do not commission the instrument and contact the manufacturer immediately.
- ► Transport product to location of use in original packaging.

3.4 Storage conditions

- ► Store product in original packaging.
- ► Observe ambient conditions (see *Ambient conditions*).
- ► Do not remove packaging until just before mounting.
- ► Keep the packaging as it will provide optimum protection during transport (e.g. change in installation site, sending for repair).
- ► Avoid exposure to the following factors.
  - Direct sunlight or proximity to hot objects
  - Mechanical vibration, mechanical shock (putting it down hard)
  - Soot, vapour, dust and corrosive gases
  - Hazardous environments, flammable atmospheres

If the original packaging is not available, pack and store the instrument as described below:

1. Place the instrument in the packaging and evenly pad with shock-absorbent material.
2. If stored for a prolonged period of time (more than 30 days), place a bag containing a desiccant inside the packaging.

4 Product Information

This section provides information about the product features and specifications.

4.1 Product description

This instrument uses free-beam radar technology for level measurement. Electromagnetic waves are emitted and reflected by the surface of the medium. The reflected signals are received and analysed, providing information about the level.

4.1.1 Function

The radar level sensor BRS S-G12O05-0105-AJ6-000S04 is optimized for measurements in industrial close-range applications and offers a range for object detection of up to 5 m. Its robust, cylindrical G1/2" process connection housing has proven itself in many industrial sectors. Interfaces and Parameterization:

- Adjustment Magnet: Allows interfering contours in the measuring range and adjust the measuring range (0 % 4 mA level).
- Analog: Interface for versatile applications.

Operating principle:

The sensor operates using the frequency-modulated continuous wave method (FMCW) in the 57-61 GHz ISM band. It emits a continuous radar signal whose frequency is varied. This enables the sensor to reliably detect the level of oil- and water-based media as well as solids.

4.1.2 Construction

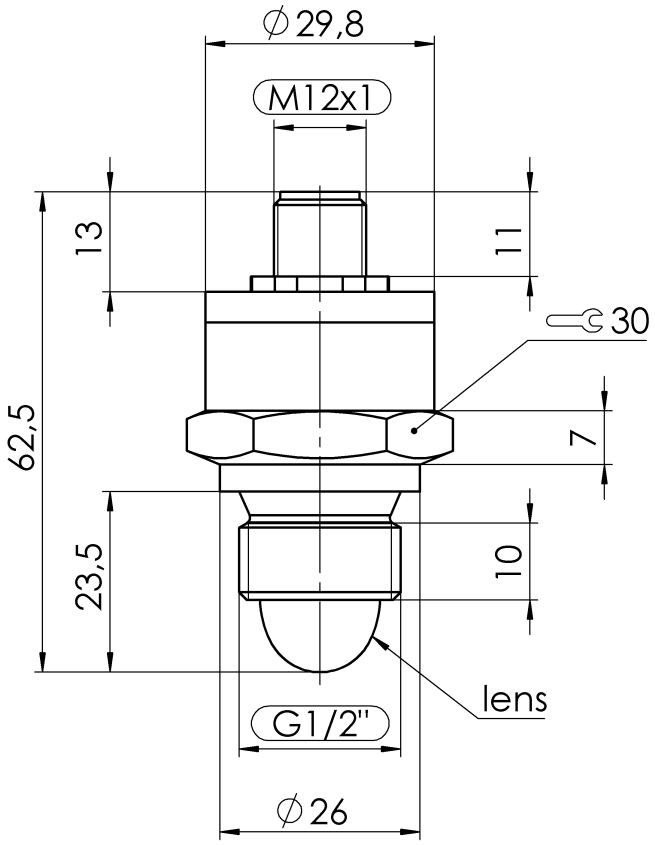

Fig. 1: Dimensions

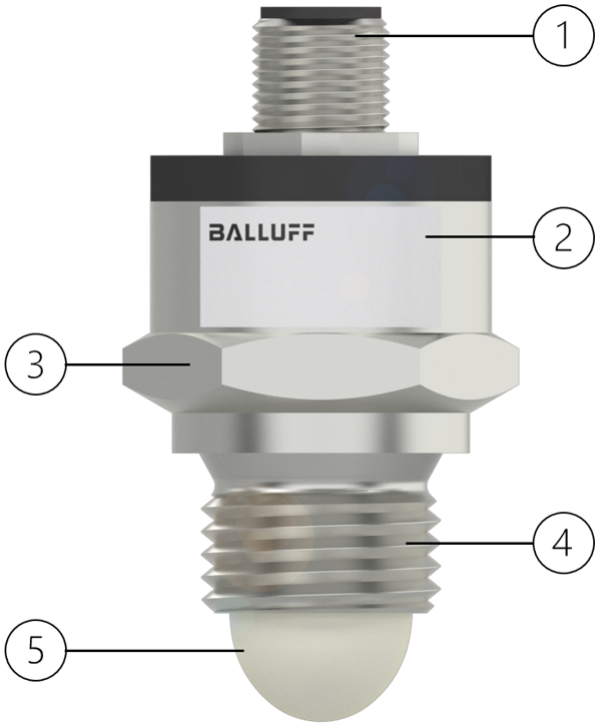

1 Electrical connection
2 Product label
3 Housing
4 Process connection
5 Active surface

Fig. 2: Mechancial labeling of the sensor

Electrical connection: The electrical connection is established via an M12 connector.

Housing: The housing contains the radar electronics, antenna, and signal processing unit.

Mounting: The sensor is mounted using the integrated mounting thread.

- ► Align the sensor towards the target object.

Radar antenna: Integrated antenna for contactless distance measurement using radar technology.

Target object: Object whose distance is determined by the sensor.

Measuring range: Defines the distance range available for reliable object detection.

- ► Refer to the technical data for the corresponding product variant.

4.1.3 Operating and display elements

The sensor does not have a visual status indicator.

4.1.4 Labeling

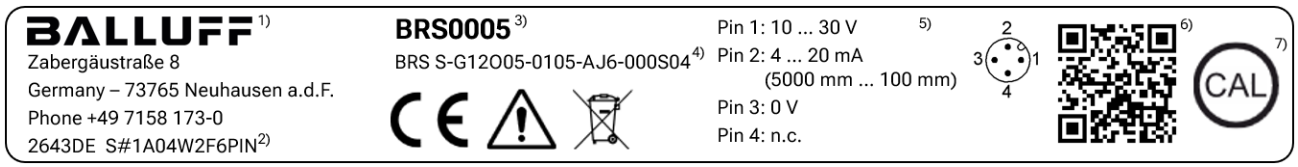

1 Manufacturer
2 Calender year + week + serial number
3 Order code
4 Type
5 Electrical connection
6 QR code
7 Marking for the adjustment magnet

4.1.5 Type code

Example	BRS	S	-	xxxxxx	-	xxx	-	xxx	-	xxxxxx
Definition	BRS	S	-	G12O05	-	0105	-	AJ6	-	000S04

Table 1: Type code variant details

Code	Parameter	Meaning
BRS	Sensor type	Balluff Radar Sensor
S	Function	Sensing
G 12 O 05	Housing type Design Housing material Housing details and lense	Process adapter imperial G1/2“ Other Housing stainless steel + plastic, lense PEEK, attached on front, beam angle 12°
01 05	Frequency range Measurement range	57 … 61 GHz 100 … 5.000 mm
A J 6	Interface Output signal Operating voltage	Analog +4 … +20 mA, falling 10 … 30 VDC
000S04	Electrical connection	4-pin, M12 plug

4.2 Technical data

Note

Further data can be found at **www.balluff.com** on the product page.

4.2.1 Specifications

Ambient conditions

Table 2: Ambient conditions

Parameter	Specification
Ambient temperature	-40 … 100 °C
Medium temperature	-40 … 100 °C
Storage temperature	-40 … 70 °C
Pressure limit of medium	0 … 25 bar
Shock rating as per EN 60068-2-27	100 g/11 ms
Vibration per EN 60068-2-6	40 g, 10 … 2000 Hz
IP rating	IP67

Detection / Measurement range

Table 3: Detection / Measurement range

Parameter	Specification
Measuring length	100 … 5,000 mm
Accuracy	± 5 mm[1]
Repeat accuracy	≤ 2 mm
Reference conditions	Per IEC 62828-4
Sampling frequency	> 1 Hz
Min. diameter of tank/silo/pipe etc.	18 mm

Electrical data

Table 4: Electrical data

Parameter	Specification
Operating voltage Ub	10 … 30 VDC
Current draw max.	200 mA
Nominal voltage	24 V DC

Radar-specific data

Table 5: Radar-specific data

Parameter	Specification
Radar technology	FMCW
Frequency Range	57.4 … 61.4 GHz
Radiated power	≤ 10 dBm EIRP

1 Depanding on the medium

Electrical connection

Table 6: Electrical connection

Parameter	Specification
Connector	M12x1-Male, 4-pin
Short-circuit protection	Yes
Reverse polarity protection	Yes

Output/Interface

Table 7: Output/Interface

Parameter	Specification
Analog, current	4 … 20 mA

Material

Table 8: Material

Parameter	Specification
Connector housing, material	Nickel-plated brass PA
Gasket, material	FKM
Housing material primary	1.4404 stainless steel
Housing material secondary	PEEK
Process connection material	1.4404 stainless steel

Mechanical data

Table 9: Mechanical data

Parameter	Specification
Process connection	G1/2”
Wrench size	30 mm
Weight	76 g

4.3 Accessories

Any accessories not specified in the scope of delivery are not included and must be ordered separately.

Note

Recommended accessories can be found at www.balluff.com on the product page.

5 Interfaces and communication

This section provides information about the interfaces and communication.

5.1 Error indications and signals

WARNING

Physical injuries due to hazardous media
Upon contact with hazardous media (e.g. oxygen, acetylene) and harmful media (e.g. corrosive, flammable, toxic, carcinogenic, radioactive), there is a danger of physical injuries. Should a failure occur, hazardous media with extreme temperatures (over 55 °C [131 °F]), under high pressure or vacuum may be present at the instrument.

- ► For these media, in addition to all standard regulations, the appropriate existing codes or regulations must also be followed.

Note

- ► Take the instrument out of operation immediately if faults cannot be eliminated by means of the listed measures.
- ► Contact the manufacturer.
- ► If a return is needed, please follow the instructions given in chapter *Return*

Note

Additional information can be found at www.balluff.com on the product page.

5.1.1 Faults

- ► In the event of any faults, first check whether the instrument is mounted correctly, mechanically and electrically.

Table 1: Faults and corrective measures

Faults	Causes	Measures
No function	Failure in power supply	► Measure voltage. ► Check cable or plug connection.
No valid output signal despite change of level (analogue output signal or switching output)	Electronics defective	► Contact the manufacturer.
No valid output signal despite change of level (analogue output signal or switching output)	Faults/Reflections in the measuring range	► Carry out a adjustment. ► If this occurs repeatedly, contact the manufacturer.
No valid output signal despite change of level (analogue output signal or switching output)	Level fluctuates greatly over a long period of time	► Use thermowell or sheet metal to calm the medium.
Instrument does not respond or responds too slowly to a change of level	Switching delay, hysteresis	► Use an instrument with suitable switching delay, hysteresis.
Output signal longer than 10 seconds > 22 mA or < 2,5 mA (4 … 20 mA)	Electronics defective	► Contact the manufacturer.
Output signal longer than 10 seconds > 22 mA or < 2,5 mA (4 … 20 mA)	No valid target detected within the predefined measuring range. Medium is unsuitable. Target at close range not detected.	► Carry out a functional test outside the vessel. ► Contact the manufacturer.
Adjustment not possible	Electronics defective, adjustment magnet too weak	► Use a different magnet. ► Contact the manufacturer.

6 Installation and connection

6.1 Installation

6.1.1 Mounting positions

Vertical installation in elongated nozzle

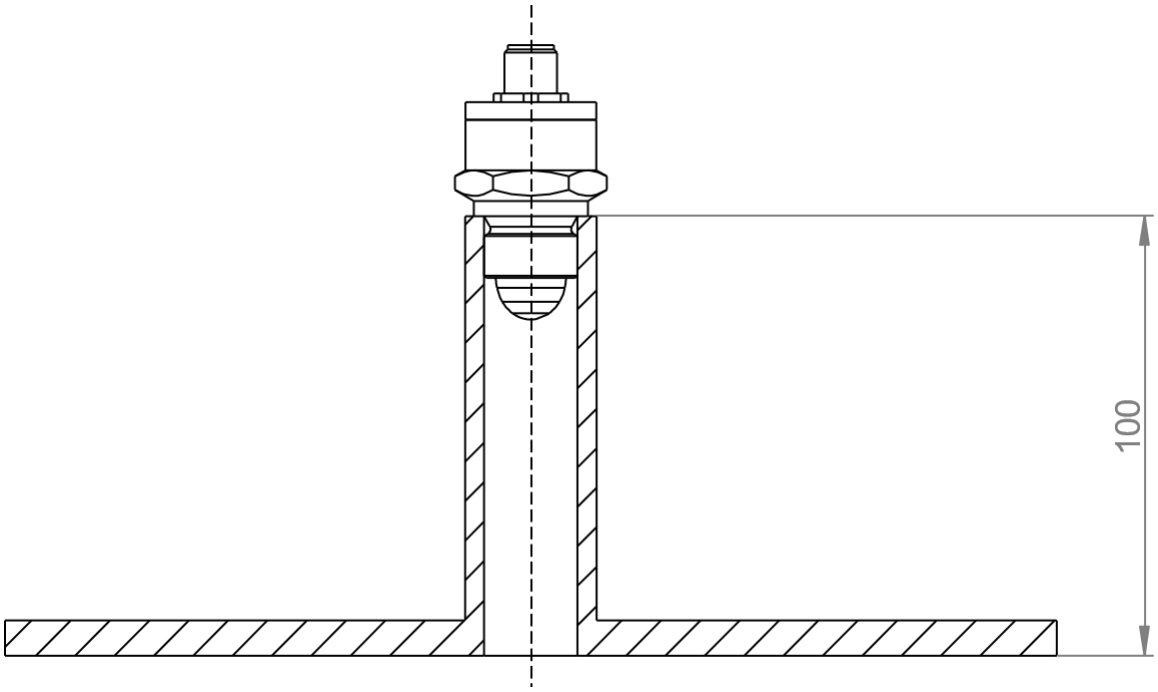

Fig. 1: Vertical installation in elongated nozzle

Vertical installation from above

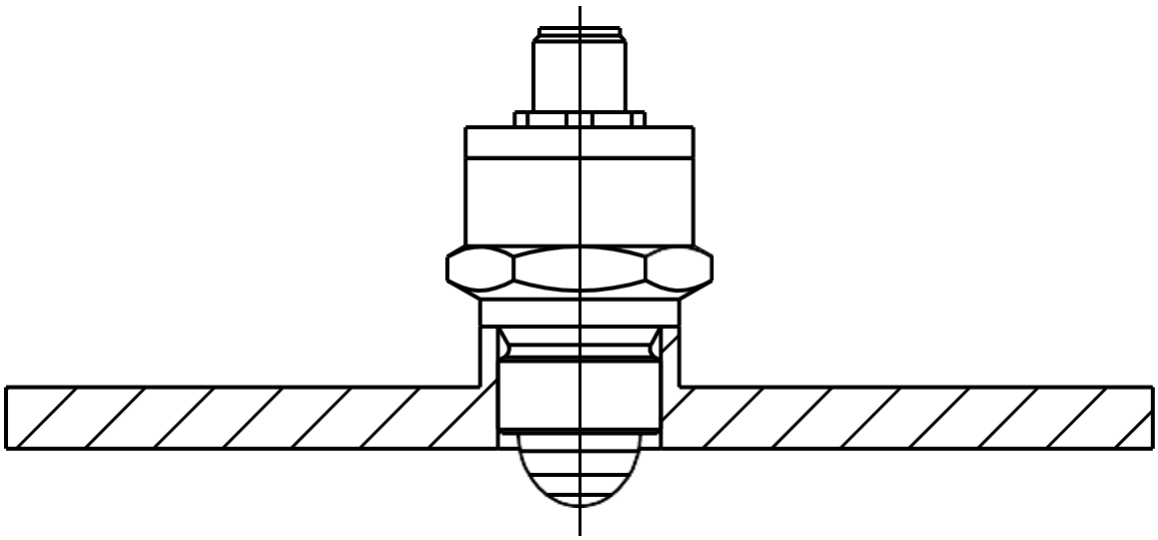

Fig. 2: Vertical installation from above

Vertical installation in the protection tube

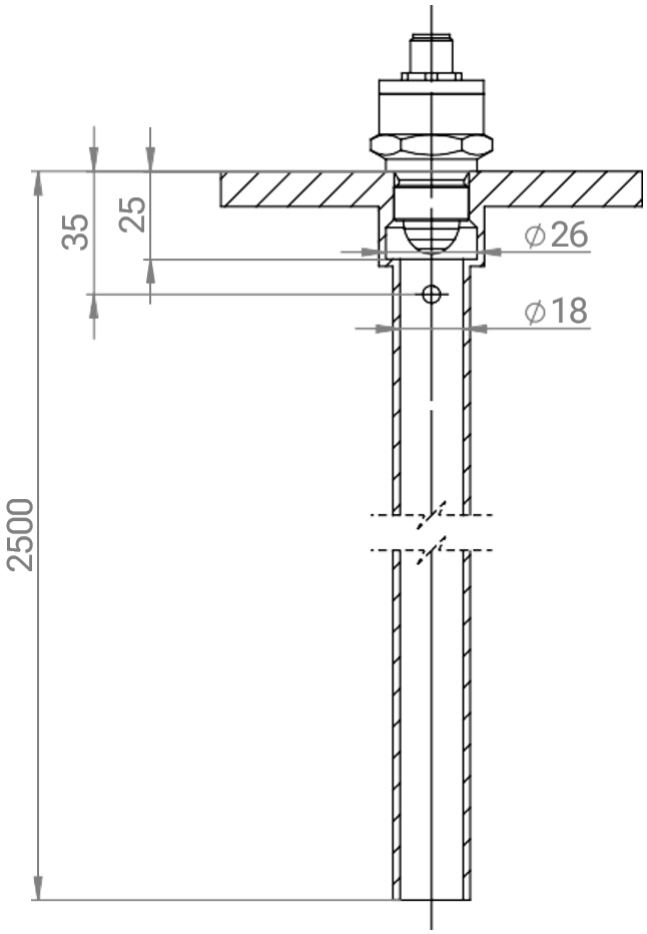

Fig. 3: Vertical installation in the protection tube

⚠ WARNING

Physical injuries due to hazardous media
Upon contact with hazardous media (e.g. oxygen, acetylene) and harmful media (e.g. corrosive, flammable, toxic, carcinogenic, radioactive), there is a danger of physical injuries. Should a failure occur, hazardous media with extreme temperatures (over 55 °C [131 °F]), under high pressure or vacuum may be present at the instrument.
- ► For these media, in addition to all standard regulations, the appropriate existing codes or regulations must also be followed.

⚠ WARNING

High-frequency electromagnetic waves
The antenna of the radar sensor emits high-frequency electromagnetic waves. To avoid health hazards, additional measures should be taken.
- ► Position the antenna so that a safety distance of at least 20 cm between the antenna and workplaces is ensured.
- ► Ensure that people do not stay in the immediate vicinity of the antenna for extended periods.

Effect of radiation on humans
The radiation of the wavelength emitted by the radar sensor has no known effects on the human body, apart from heat absorption in the range of a few tenths of a degree. The radiation of the radar sensor is comparable to, for example, smartphones and Wi-Fi routers, which operate insimilar frequency range. However, the transmission power of the radar sensor is much lower.

- ► Check the instrument for any damage that may have been caused.
- ► In the event of any damage, do not commission the instrument and contact the manufacturer immediately.

6.1.2 Mounting

- ► Observe the torque values of the screws specified in pipefitting work.
- ► In the selection of the mounting material (seals, screws, washers and nuts), take the process conditions into account.
- ► Specify the suitability of the seal with regard to the medium and its vapours.
- ► Ensure that the seal has corresponding corrosion resistance.

6.1.3 Mounting preparation

1. Ensure that the sealing faces of the vessel or instrument are clean and do not show any mechanical damage.
2. Sensor components, process seals and process interfaces must be in accordance with the installation conditions, and the process pressure, the process temperature and the medium characteristics must correspond to the parameters given on the product label.

6.2 Electrical connection

Electrical connection to the voltage supply

- ► For supply voltage, see product label or connection diagram.

Pin assignment

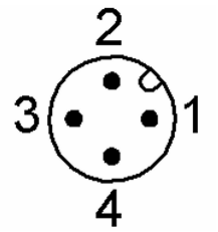

Fig. 4: M12 plug pin assignment (view on pin side)

Table 1: M12 plug pin assignment

Pin	Function
1	10 … 30 V
2	4 … 20mA
3	0 V
4	n.c.

Note

For pin assignments, see also product label

6.3 Shielding and cable routing

Both unshielded and shielded cables can be used to connect the devices. In systems with strong electromagnetic interference, the use of shielded cables is recommended.

- Route cables with strain relief.
- Grounding the radar sensor can minimize the influence of electromagnetic interference.

7 Commissioning

In most applications, the BRS level sensor can be used directly after installation.

► Perform the adjustment procedure only if interfering contours within the measuring range shall be suppressed or the 0 % level shall be adapted to the application.

7.1 Adjustment

The BRS level sensor provides an adjustment function for adapting the sensor to the application. During the adjustment process, interfering contours within the measuring range are suppressed and the 0 % level (4 mA) is defined.

► Perform the adjustment after installation and alignment of the sensor.

► Use the supplied magnet and follow the steps below to carry out the adjustment procedure.

1. Hold the magnet to the marked spot, see the “circle” on the product label.
2. Output signal = 1 mA
    - The magnet was detected by the instrument
    - Continue to hold the magnet to the marked spot (approx. 10 seconds)
3. Output signal = 2.5 mA
    - Remove the magnet
    - The adjustment process is being carried out (approx. 5 seconds)

The adjustment process is complete when the output signal jumps to a valid value between 4 … 20 mA.

8 Operation and maintenance

8.1 Startup

DANGER

Unexpected system reactions During commissioning, incorrect parameterization of the measurement system may lead to unexpected reactions of connected control systems. This may result in property damage or hazardous situations. Please mind the following safety instructions:

- Commission the device only by qualified personnel.
- Observe the safety instructions of the machine and plant manufacturer.
- Keep clear of hazardous machine areas during commissioning.

DANGER

Uncontrolled system movements
Uncontrolled system movement
When starting up, if the sensor is part of a closed loop system whose parameters have not yet been set, the system may perform uncontrolled movements. This could result in personal injury and equipment damage.

- Persons must keep away from the system's hazardous zones.
- Startup must be performed only by trained technical personnel.
- Observe the safety instructions of the equipment or system manufacturer.

1. Check connections for tightness and correct polarity. Replace damaged connections.
2. Turn on the system.
3. Check measured values and adjustable parameters and readjust the BRS if necessary. Check the values over the entire measuring range

Note

- Check for the correct values, especially after replacing the BRS or after repair by the manufacturer.

8.2 Operation

WARNING

High-frequency electromagnetic waves
The antenna of the radar sensor emits high-frequency electromagnetic waves. To avoid health hazards, additional measures must be taken.

- Position the antenna so that a safety distance of at least 20 cm between the antenna and workplaces is ensured.
- Ensure that people do not stay in the immediate vicinity of the antenna for extended periods.

- Regularly check function of the BRS and all associated components.
- Take the BRS out of operation whenever there is a malfunction.
- Secure the system against unauthorized use.
- Check fasteners and retighten if needed.

8.2.1 Operating states

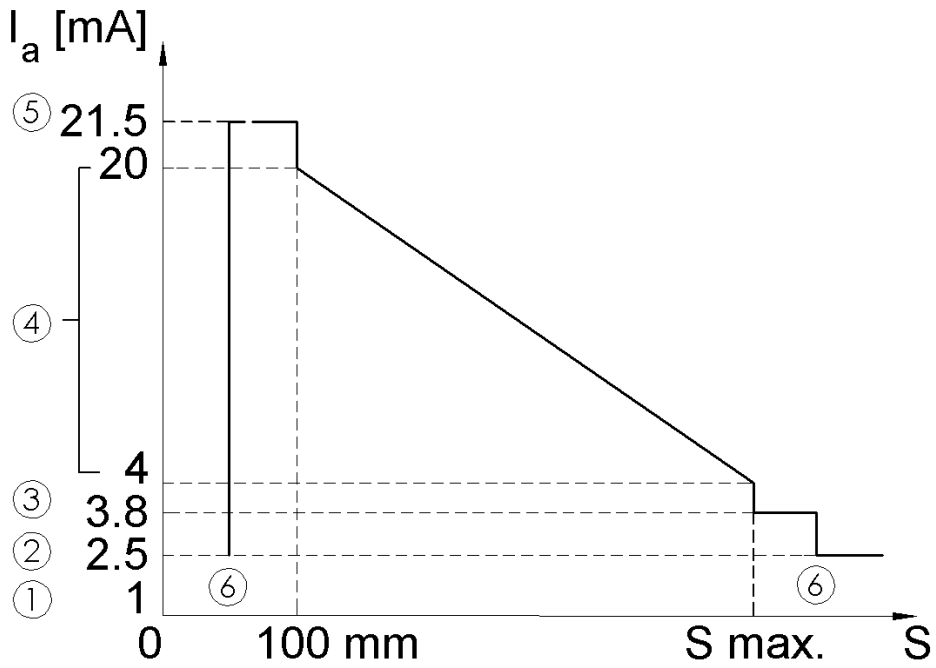

1 Adjustment, active
2 No target detected
3 Target detected below measuring range
4 Target detected within measuring range
5 Target detected above measuring range
6 Transition area: Target detection not guaranteed

Table 1: Operation states

Output current	Description
4 … 20 mA	Target detected within the measuring range
21.5 mA	Target detected outside the measuring range (beyond the upper measuring range limit)
3.8 mA	Target detected outside the measuring range (below the lower measuring range limit)
2.5 mA	No target detected
1 mA (< 10 seconds)	Adjustment, active
2.5 mA(< 5 seconds)	Adjustment completed

8.2.2 Sensor detection ranges

Blind zone

The device has a blind zone directly in front of the antenna.

- Reliable level measurement is not possible within the blind zone.
- Objects located in the blind zone may cause unwanted reflections and influence the measurement result.
- Thin materials with low attenuation, such as plastics, may be penetrated by the radar signal.

► Install the sensor so that the expected measuring range is outside the blind zone.

► Verify suitability in the specific application.

Measuring range

Level measurement is possible within the specified measuring range of the device.

- The achievable measuring distance depends on the application conditions and the reflective properties of the target medium.
- The maximum measuring range specified in the technical data is achieved under defined reference conditions.
- Tanks, vessel geometry, installations, agitators, foam, buildup and product properties may influence the achievable measuring range.

► Operation outside the specified measuring range is not recommended.

i Note

► For reliable measurements, ensure that no fixed installations such as ladders, pipes, filling equipment or tank internals are located within the main radar beam whenever possible.

8.2.3 Radar reflectivity of different media

Influence of the measured medium

The performance of radar level measurement depends on the reflective properties of the measured medium and its surroundings.

Radar signals are reflected by the surface of the medium. The strength of the reflected signal depends on factors such as the dielectric constant, surface characteristics, and installation conditions.

Media with stronger reflections generally provide more robust and reliable measurements than media with weaker reflections.

Dielectric constant

The dielectric constant (ε_r) describes how a material interacts with electromagnetic waves. For radar level measurement, the dielectric constant influences the strength of the reflected radar signal. In general:

- Media with a high dielectric constant produce stronger reflections.
- Media with a low dielectric constant produce weaker reflections.
- Weaker reflections may reduce the achievable measuring range and signal quality.

Typical reflectivity of different media

The table below provides general guidance regarding the radar reflectivity of common materials.

Table 2: Typical reflectivity of different media

Material / Medium	Typical Reflectivity
Metal surface	Very high
Water-based liquids	High
Acids and chemicals	High
Glass	Medium
Plastics	Low to Medium
Oils and hydrocarbons	Medium to low
Dry bulk solids	Application dependent
Foam	Low

The actual measurement performance depends on the individual application and operating conditions.

Penetration of non-metallic materials

Radar signals can penetrate many non-metallic materials. Examples include:

- plastic

- glass
- ceramics

This property may allow measurements through plastic containers or protective covers.

The suitability depends on factors such as:

- material type
- wall thickness
- additives and fillers
- installation conditions

► Application-specific testing is recommended.

Factors influencing measurement performance The achievable measuring range and signal quality can be influenced by:

- dielectric constant of the medium
- foam formation
- turbulent surfaces
- buildup on the antenna
- tank geometry
- internal installations such as pipes, agitators or ladders
- installation position of the sensor

► For optimum performance, install the sensor so that obstacles are avoided within the main radar beam whenever possible.

8.3 Cleaning

Note

Damage to property due to improper cleaning
Improper cleaning may lead to damage to the instrument.
► Do not use any aggressive cleaning agents.
► Do not use any hard or pointed objects for cleaning.
► Do not use any abrasive cloths or sponges.

Note

Damage to property and the environment due to residual media
Residual media at the instrument and in the environment can cause damage to property and the environment.
► Observe the cleaning instructions.

1. Before cleaning, correctly disconnect the instrument from the pressure supply, switch it off and disconnect it from the mains.
2. Clean the instrument with a moist cloth.

► Do not expose the electrical connections to moisture.

8.4 Maintenance

The instrument operates maintenance- and wear-free when used as intended; however, it must be subjected to visual inspection within the context of regular maintenance and included in the vessel pressure test. Repairs must only be carried out by the manufacturer.

9 Dismounting, return and disposal

9.1 Dismounting

- ► Only dismount the instrument once it has been depressurised and disconnected from voltage supply.
- ► If necessary, ensure that the vessel has strain relief.

⚠ WARNING

Physical injury
When dismounting, there is a danger from hazardous media and high pressures.
- ► Observe the information in the material safety data sheet for the corresponding medium.
- ► Disconnect the instrument once the system has been depressurised and has cooled down.
- ► Flush or clean the dismounted instrument (following operation), in order to protect persons and the environment from exposure to residual media.

⚠ WARNING

Risk of burns
When dismounting, there is a danger of physical injuries due to dangerously hot instrument surfaces.
- ► Ensure that the instrument has cooled down to ambient temperature.

⚠ WARNING

Physical injuries and damage to property and the environment due to hazardous media
Upon contact with hazardous media (e.g. oxygen, acetylene, flammable or toxic substances) and harmful media (e.g. corrosive, toxic, carcinogenic, radioactive), there is a danger of physical injuries and damage to property and the environment.
Should a failure occur, hazardous media with extreme temperatures (over 55 °C [131 °F]), under high pressure or vacuum may be present at the instrument.
- ► For these media, in addition to all standard regulations, the appropriate existing codes or regulations must also be followed.

9.2 Return

⚠ CAUTION

Physical injuries
Residual media can result in a risk to persons.
- ► Carry out the cleaning process in accordance with the manufacturer's instructions.

Strictly observe the following when shipping the instrument:

- ► All instruments delivered to Balluff must be free from any kind of hazardous substances (acids, bases, solutions, etc.) and must therefore be cleaned before being returned, see chapter *Cleaning*.
- ► When returning the instrument, use the original packaging or a suitable transport packaging.

To avoid damage:

1. Wrap the instrument in an anti-static plastic film.
2. Place the instrument in the packaging and pad it evenly with shock-absorbent material.
3. If possible, include a bag with desiccant in the packaging.

4. Label the shipment as transport of a highly sensitive measuring instrument.

Note

Information on returns can be found under the heading “Service” on our local website (return application).

9.3 Disposal

Incorrect disposal can put the environment at risk.

- Dispose of instrument components and packaging materials in an environmentally compatible way and in accordance with the country-specific waste disposal regulations.

Disposal of electrical appliances

This instrument is labelled in accordance with the EU Waste Electrical and Electronic Equipment (WEEE) directive.

- Do not dispose of this instrument with household waste.



- Hand in old instruments for environmentally friendly disposal at a designated collection point for the disposal of electrical and electronic equipment.
- Ensure proper disposal in accordance with national regulations and observe the currently applicable regulations.

10 Support

10.1 Repair

Repairs to the product may only be carried out by Balluff.

- If the product is defective, contact our technical customer service

Headquarters and Technical Service Hubs

www.balluff.com/go/contact

Balluff GmbH
Zabergäustraße 8
73765 Neuhausen a.d.F.
Germany

Document version: *2026-11-20 - 802d1be5afcb74064533882a5a66af4c67d665b8*